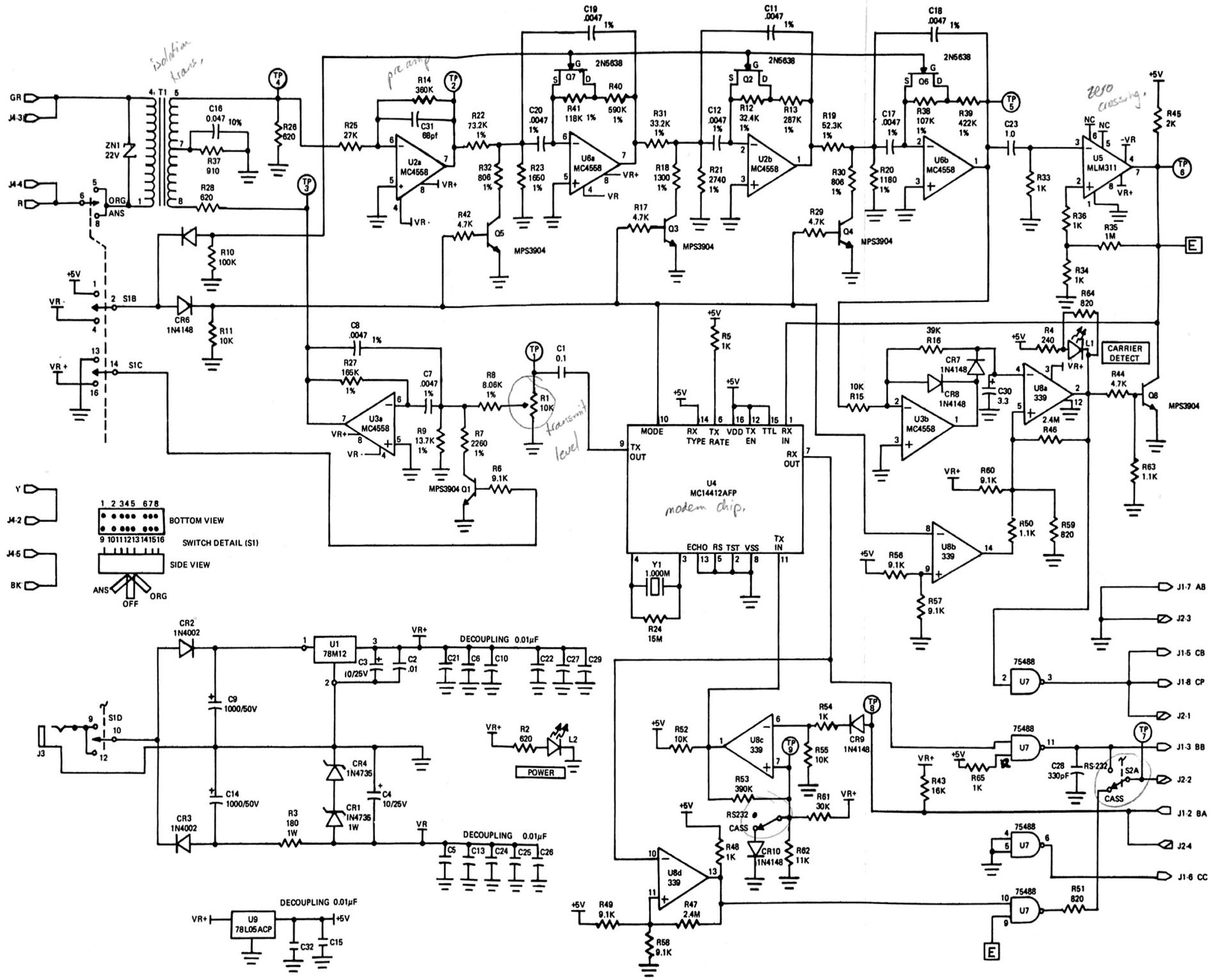

Figure 5. Schematic Diagram

MODEM I

PAGE 1 OF 1