REVISIONS					
REV	DESCRIPTION	DATE	DR	CHK	APPR
	SEE SHEET 1				

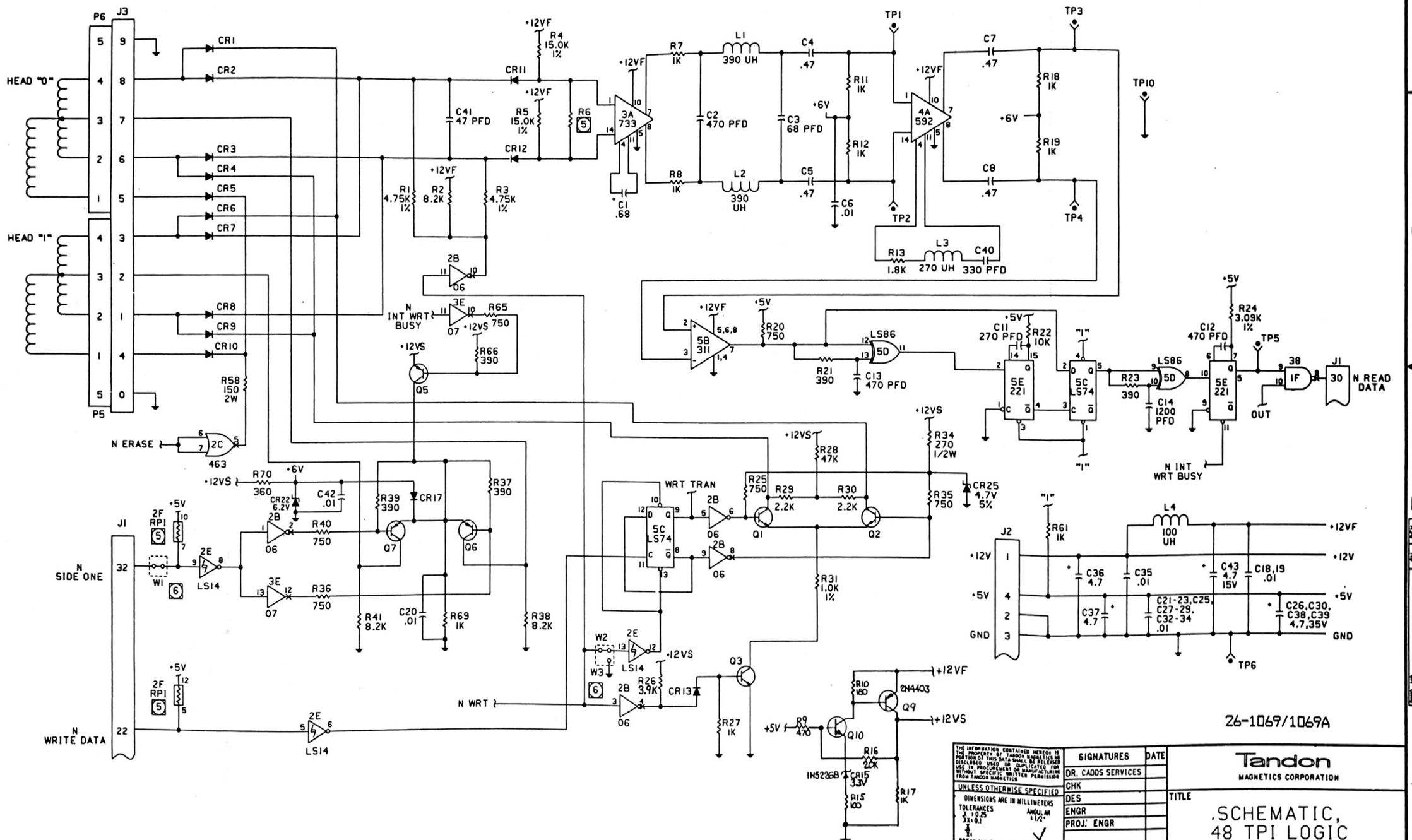

NOTES: UNLESS OTHERWISE SPECIFIED

THE INFORMATION CONTAINED HEREON IS THE PROPERTY OF TANDON MAGNETICS NO PORTION OF THIS DATA SHALL BE RELEASED DISCLOSED USED OR DUPLICATED FOR USE IN PROCUREMENT OR MANUFACTURING WITHOUT SPECIFIC WRITTEN PERMISSION FROM TANDON MAGNETICS

UNLESS OTHERWISE SPECIFIED
DIMENSIONS ARE IN MILLIMETERS
TOLERANCES
X ±0.25
X.X ±0.1
X.XX
X.XXX
ANGULAR ±1/2°
BREAK ALL SHARP CORNERS APPROX .010

FINISH: NONE

MATL: NONE

SIGNATURES	DATE
DR. CADDS SERVICES	
CHK	
DES	
ENGR	
PROJ. ENGR	

Tandon
MAGNETICS CORPORATION

TITLE
SCHEMATIC,
48 TPI LOGIC

SIZE	CODE IDENT NO	DWG NO.	REV
D		180011	F
SCALE NONE		DO NOT SCALE DWG	SHEET

1 of 2

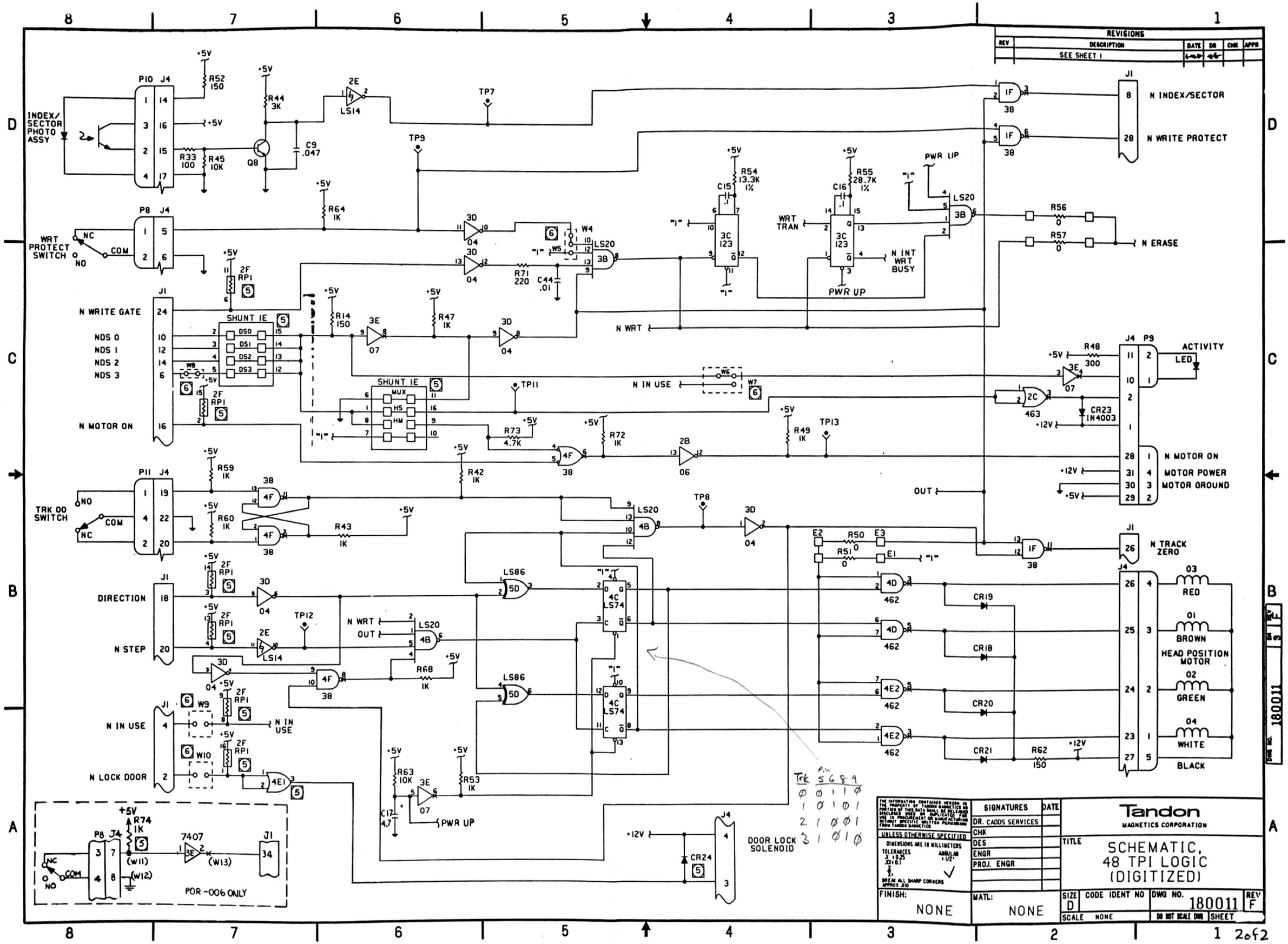
REVISIONS
REV | DESCRIPTION | DATE | DR | CHK | APPR
SEE SHEET 1
INDEX/ SECTOR PHOTO ASSY
P10 J4
R52 150
R44 3K
R33 100
R45 10K
Q8
C9 .047
2E LS14
TP7
TP9
J1
N INDEX/SECTOR
N WRITE PROTECT
1F 38
WRT PROTECT SWITCH
NC
COM
NO
P8 J4
R64 1K
3D 04
W4
LS20 3B
R71 220
C44 .01
R54 13.3K 1%
C15 .1
3C 123
R55 28.7K 1%
C16 .1
WRT TRAN
PWR UP
N INT WRT BUSY
PWR UP
LS20 3B
R56 0
R57 0
N ERASE
N WRITE GATE
NDS 0
NDS 1
NDS 2
NDS 3
N MOTOR ON
SHUNT 1E
DS0
DS1
DS2
DS3
2F RP1
R14 150
3E 07
R47 1K
N WRT
N IN USE
W6
W7
TP11
MUX
HS
HM
R73 4.7K
4F 38
R72 1K
2B 06
R49 1K
TP13
R48 300
3E 07
2C 463
CR23 IN4003
J4 P9
ACTIVITY LED
N MOTOR ON
MOTOR POWER
MOTOR GROUND
OUT
P11 J4
TRK 00 SWITCH
R59 1K
R60 1K
R42 1K
R43 1K
LS20 4B
TP8
3D 04
E2
E3
E1
R50 0
R51 0
N TRACK ZERO
DIRECTION
N STEP
TP12
2E LS14
R68 1K
LS86 5D
4C LS74
4D 462
4E2 462
CR19
CR18
CR20
CR21
R62 150
+12V
03 RED
01 BROWN
HEAD POSITION MOTOR
02 GREEN
04 WHITE
BLACK
W9
N IN USE
W10
N LOCK DOOR
4E1
R63 10K
C17 4.7
3E 07
R53 1K
PWR UP
CR24
DOOR LOCK SOLENOID
Trk 5 6 8 9
0 0 1 0
1 0 1 0 1
2 1 0 0 1
3 1 0 1 0
+5V
R74 1K
P8 J4
7407
J1 34
(W11)
(W12)
(W13)
FOR -006 ONLY
THE INFORMATION CONTAINED HEREIN IS THE PROPERTY OF TANDON MAGNETICS NO PORTION OF THIS DATA SHALL BE RELEASED DISCLOSED USED OR DUPLICATED FOR USE IN PROCUREMENT OR MANUFACTURING WITHOUT SPECIFIC WRITTEN PERMISSION FROM TANDON MAGNETICS
UNLESS OTHERWISE SPECIFIED
DIMENSIONS ARE IN MILLIMETERS
TOLERANCES
.X ±0.25
.XX ±0.1
.XXX ±0.05
ANGULAR ±1/2°
BREAK ALL SHARP CORNERS APPROX .010
FINISH: NONE
SIGNATURES | DATE
DR. CADDS SERVICES
CHK
DES
ENGR
PROJ. ENGR
MATL: NONE
Tandon MAGNETICS CORPORATION
TITLE
SCHEMATIC, 48 TPI LOGIC (DIGITIZED)
SIZE D
CODE IDENT NO
DWG NO. 180011
REV F
SCALE NONE
DO NOT SCALE DWG
SHEET
180011
2 of 2