ZONE	LTR	REVISION DESCRIPTION	DATE	APPROVED

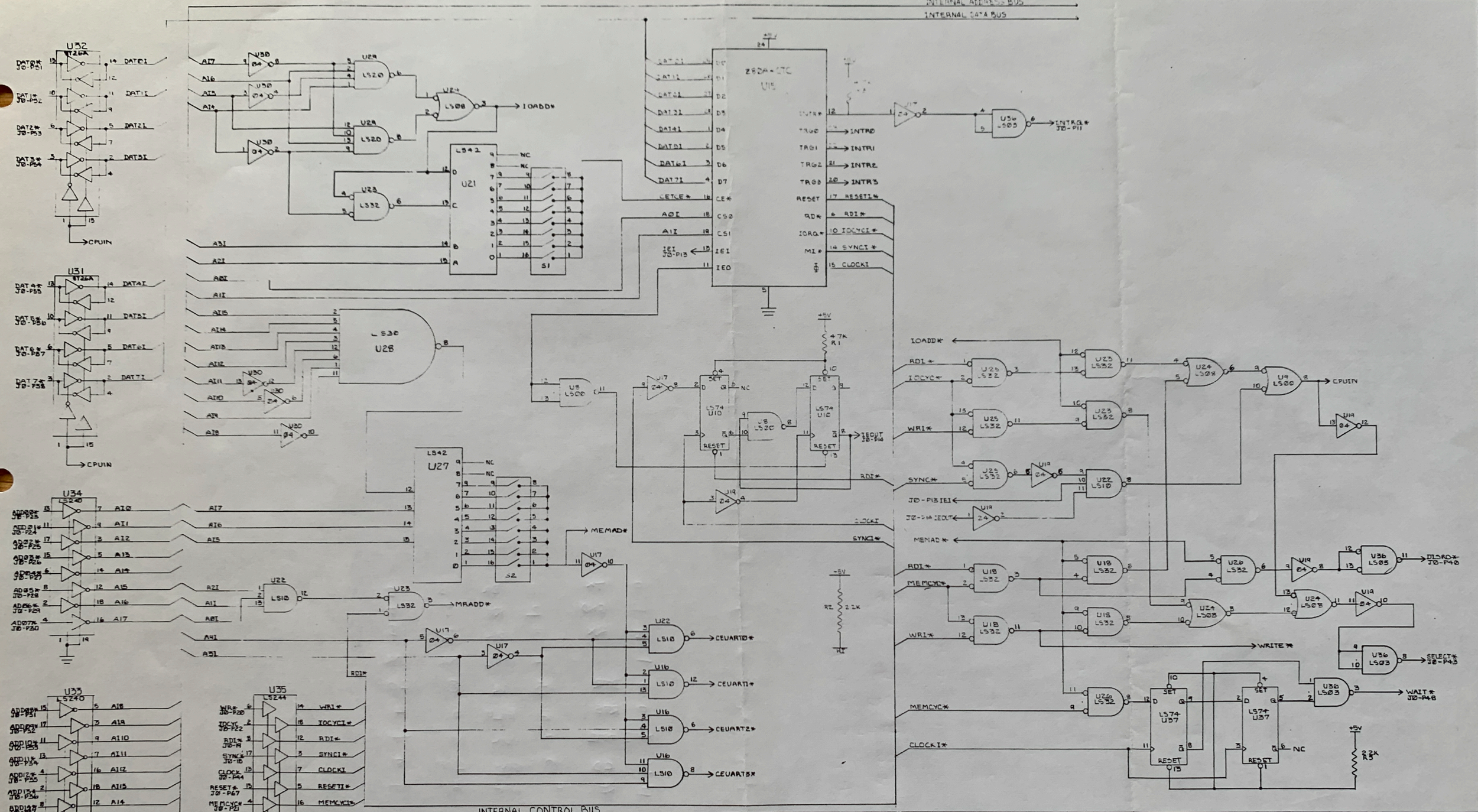

#0220 TECHNICAL SUPPORT
DOCUMENTATION LIBRARY
7-26-83 LH

MATERIAL	UNLESS OTHERWISE SPECIFIED			DRAFT C. Hoefelmeyer	DATE	TITLE
	TOLERANCES .XX = ± .010 .XXX = ±.005 ANGLES = ±1° HOLE DIA TOLERANCES .014 - .250 = +.005 -.001; .251 - .750 = +.008 -.001; .751 - UP = +.015 -.001			CHECK	DATE	QUAD UART BOARD
FINISH				DESIGN Tommy D. Sampson	DATE 7/1/81	
				APPD Tommy D. Sampson	DATE 7/1/81	Project #324
	DIMENSIONS ARE IN INCHES AND APPLY AFTER PLATING			APPD	DATE	
	DO NOT SCALE THIS DRAWING	NEXT ASSY.	USED ON	tandy	DWG. NO. 8000099	SIZE D
					SCALE / SHEET	OF 2