REVISION				
ZONE	LTR	DESCRIPTION	DATE	APPROVED
		RELEASED FOR PRODUCTION	2-7-83	WAH

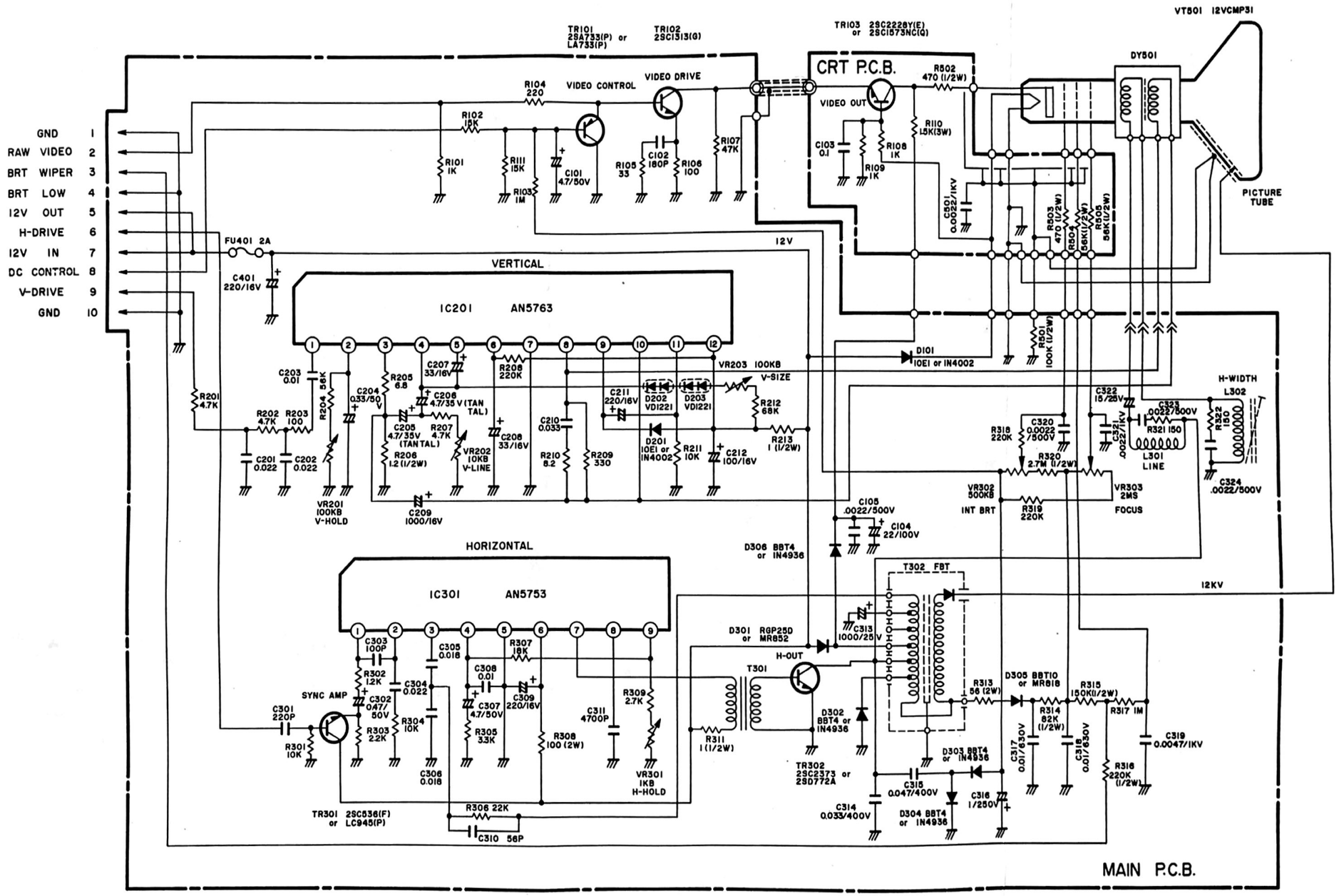

NOTE (1) ALL RESISTANCE VALUES ARE INDICATED IN "OHM" ($K=10^3$ OHM, $M=10^6$ OHM)
(2) ALL CAPACITANCE VALUES ARE INDICATED IN "µF" ($P=10^{-6}$ µF)

UNLESS OTHERWISE SPECIFIED		
TOLERANCES .XX = ± .010 .XXX = ±.005 ANGLES = ±1° HOLE DIA TOLERANCES .014 - .250 = +.005 -.001 .251 - .750 = +.008 -.001 .751 - UP = +.015 -.001		
DIMENSIONS ARE IN INCHES AND APPLY AFTER PLATING		448
DO NOT SCALE THIS DRAWING	NEXT ASSY.	USED ON

DRAFT STEPHEN HATFIELD	DATE 2-3-83	TITLE SCHEMATIC – TCE 12" VIDEO MONITOR 8790608 PROJECT 448
CHECK	DATE	
DESIGN	DATE	
APPD	DATE 2-7-83	
APPD W H Farwell	DATE 2-7-83	
tandy	DWG NO 8000190	SIZE C
	SCALE –	SHEET 1 OF 1