REVISION				
ZONE	LTR	DESCRIPTION	DATE	APPROVED
		RELEASED FOR PRODUCTION	3-23-83	WHA

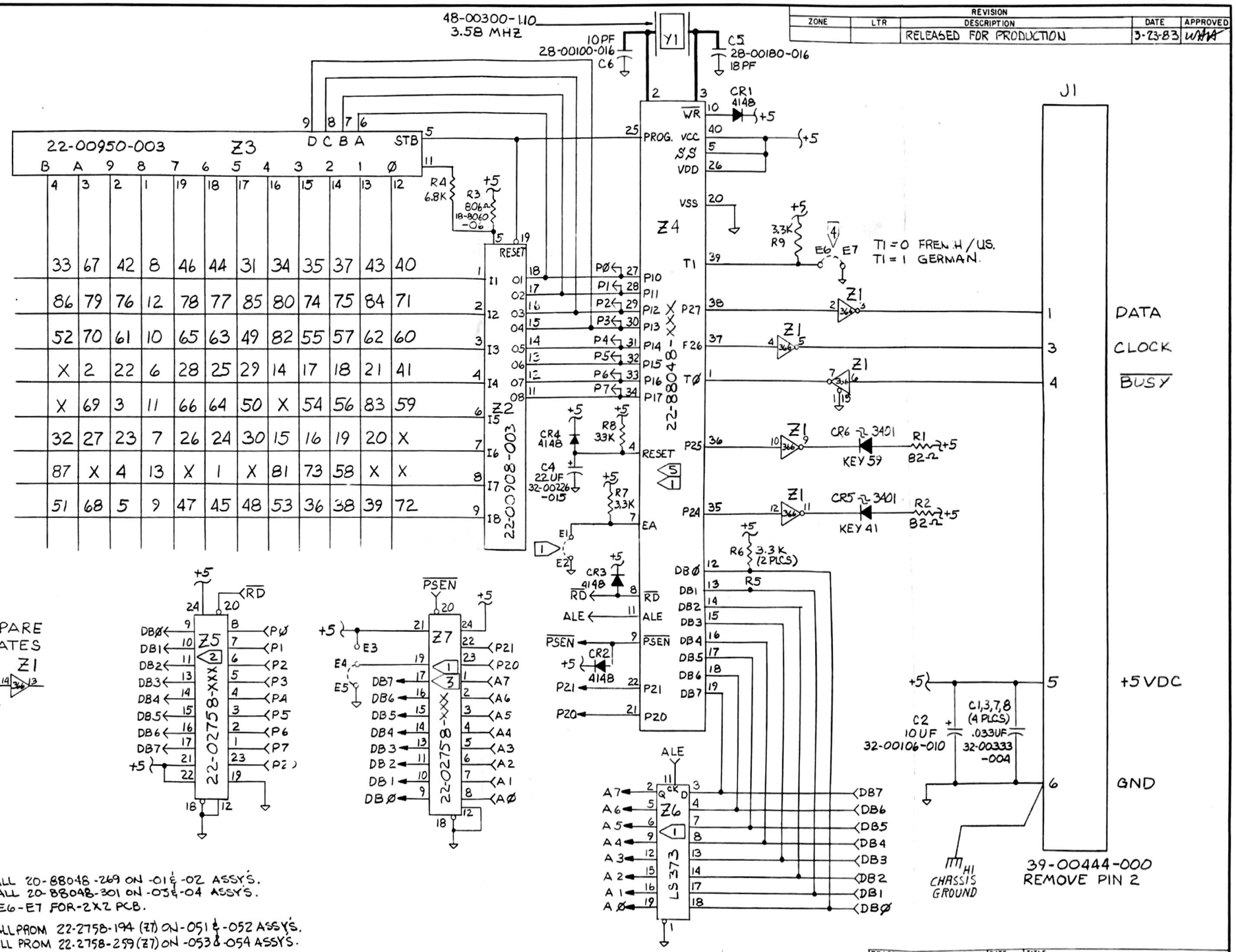

5 INSTALL 20-88048-269 ON -01 & -02 ASSY'S.
INSTALL 20-88048-301 ON -03 & -04 ASSY'S.

4 CUT E6-E7 FOR-2X2 PCB.

3 INSTALL PROM 22-2758-194 (Z7) ON -051 & -052 ASSY'S.
INSTALL PROM 22-2758-259 (Z7) ON -053 & -054 ASSY'S.

2 DO NOT INSTALL.

1 ON -050 SERIES ASSYS. ONLY, INSTALL 20-88035-000 AT Z4, INSTALL Z6 & Z7, PER NOTE 3
DELETE CONNECTION E1 TO E2.

NOTES:

DRAFT PAUL S. SLONAKER	DATE 3-21-83	TITLE SCHEMATIC - KEYTRONIC KEYBOARD	
CHECK	DATE		
DESIGN	DATE		
APPD M. Crist	DATE 3/24/83		
APPD Cotherwell SDS	DATE 3/23/83	PROJECT 448	
tandy		DWG NO 8000196	SIZE C
		SCALE NONE	SHEET 1 OF 1