| REVISION | | | | |
|---|---|---|---|---|
| ZONE | LTR | DESCRIPTION | DATE | APPROVED |
| | | PRODUCTION RELEASE | 1-12-83 | |

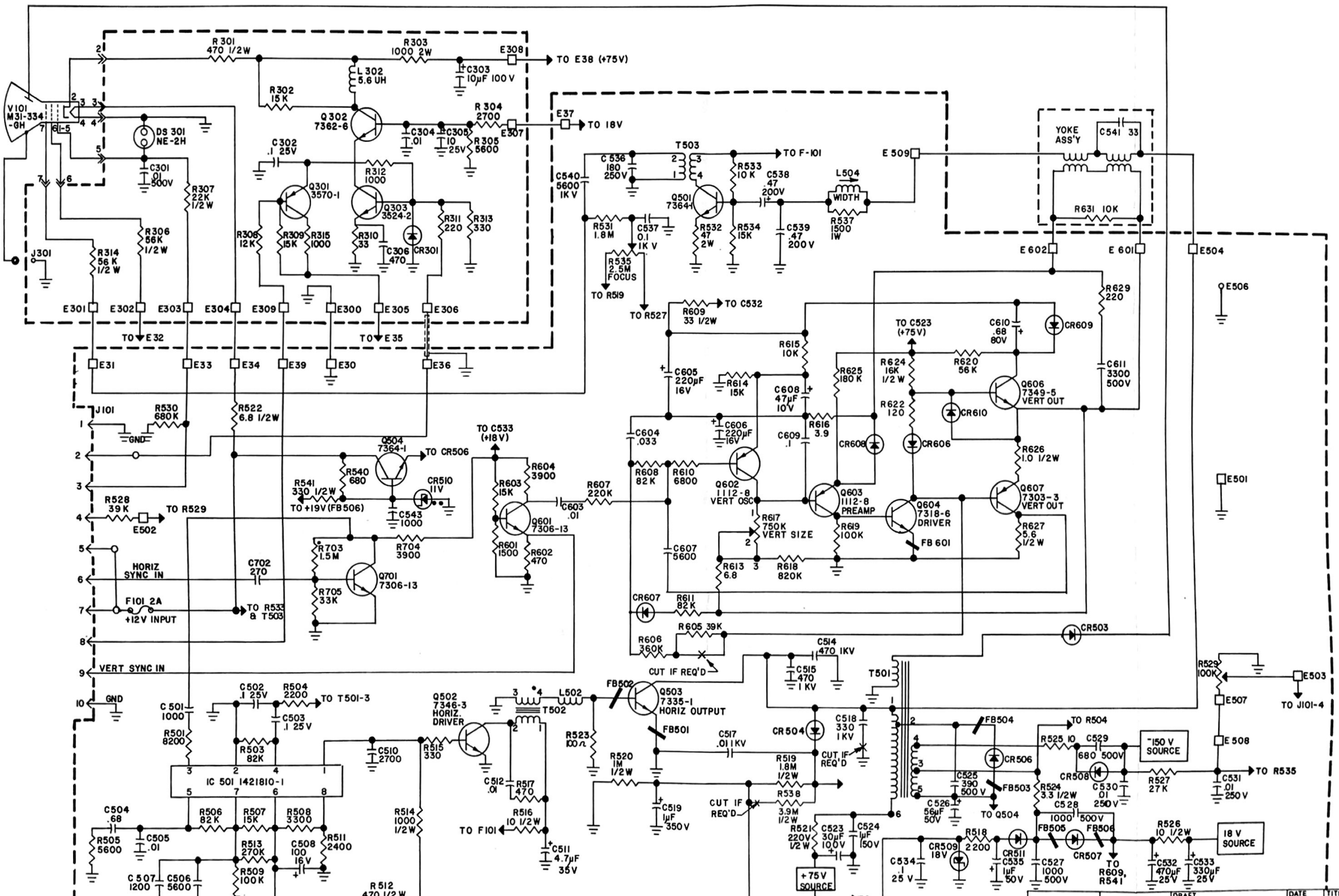


NOTES:

1. ALL RESISTANCE VALUES IN OHMMS
2. K=1000
3. ALL CAPACITANCE VALUE LESS THAN 1.0 ARE IN µF. 1.0 AND ABOVE ARE IN PF EXCEPT OTHERWISE INDICATED
4. ALL RESISTORS ARE 1/4W, ALL CAPACITORS ARE 50 RATED VOLTAGE EXCEPT OTHERWISE INDICATED
5. ALL RESISTANCE ARE 5% UNLESS INDICATED AS FOLLOWS:
   *INDICATES 10% TOL.
   **INDICATES 2% TOL.
6. CAPACITANCE INDICATED * ARE 5% TOL.

| NEXT ASSY | USED ON |
|---|---|
| | 448 |

| | | |
|---|---|---|
| DRAFT DONALD R. BOOTH | DATE 1-5-83 | TITLE 12" MONITOR CHASSIS RCA KTR-141A PROJ. 448 |
| CHECK M. CRITZ | DATE 1-11-83 | |
| DESIGN | DATE | 26-4004 |
| APPD | DATE 1-11-83 | |
| APPD | DATE 1-12-83 | |

tandy

| DWG. NO | SIZE |
|---|---|
| 8000184 | D |
| SCALE NONE | SHEET 1 OF 1 |