TECHNICAL BULLETIN INDEX
Sorted by Bulletin Number
06/25/86

No.	Catalog	Description	Rev. Date
16:001	26-6002	Cabling for FDC alignment and jumpering of board.	05/13/82
16:002	26-6002	Installing Bisync.	05/13/83
16:003	26-6002	Intermittent operation of the Z80 CPU board.	05/13/83
16:004	26-6002	Checksums for Model II/16 boot ROM.	01/24/84
16:005	26-6002	C41 installed backwards on early Rev. D CPU boards	05/13/83
16:006	26-6002	Proper jumpering for 2 internal drives.	05/13/83
16:007	26-6002	Adjusting head load arm and disk ejector trigger.	05/19/83
16:008	26-6002	Modification to correct motor speed variation.	05/16/83
16:009	26-6002	Correct drive termination.	05/19/83
16:010	26-6002	Check for correct fusing of 24 volts.	05/16/83
16:011	26-4167	Additional hardware necessary for Model 12 and 16.	05/25/83
16:012	26-6002	Schematics for Zenith and Motorola video boards.	10/07/82
16:013	26-6002	Intermittent speed errors on Tandon drives.	10/18/82
16:014	26-6002	Slippage of the stepper band assembly.	02/02/83
16:015	26-6002	Increasing the +5 volt power supply.	09/04/84
16:016	26-6002	Installation of Multi-terminal brd. in Model 16.	05/28/85
16:017	26-6002	Schematic corrections on KeyTronic keyboard.	04/26/84
16:018	26-6002	Memory buffer problems on 68K RAM boards.	08/27/84
16:019	26-6014	Insure good ground between 68K CPU and RAM brds.	01/16/85
16:020	26-6014	Correct timing to memory board during write cycle.	02/13/85
16:021	26-6014	Outline 8 MHz upgrade procedure.	03/19/85
16:022	26-6002	An error in the installation of R87.	05/29/85
16:023	26-6002	Modification for Xenix 3.0 on a 6 Mhz CPU board.	07/11/85
16:024	26-6002	Modifications to increase reliability.	07/22/85
16:025	26-6001	To allow use of Disk Cartridge System.	01/14/86

 COPYRIGHT © 1986

DATE: May 12, 1982

REVISION DATE: May 13, 1983

BULLETIN NO: 16:1

PRODUCT: 26-6ØØ1/2 Model 16

SUBASSEMBLY: AX-9241 FDC Board (Redesign)

PURPOSE: Proper cabling when doing FDC alignments and jumpering configurations.

DISCUSSION/PROCEDURE: When using the extender board and cable with a two drive Model 16 to do FDC alignment, make sure you connect up BOTH internal drives to the cable. The termination is on drive 1 and is necessary for proper operation. Do NOT have a terminator plug installed in the cable.

Proper jumpering for this board installed in a Model 16 is:

L-M	Selects a positive XFERRQ
P-Q	Divides 4 MHZ CPU clock by 2 for 1791 FDC chip
B-C	Selects 8" drive ready signal
S-T	Allows more than 1 internal drive
F-H	Sets two internal drives
J-K	FDC board will use ports EØ through EF
W-X	Disables head load delay

Unlabeled boards do not have a W-X-Y jumper, Rev. A and later will.

COPYRIGHT © 1986

DATE: May 26, 1982

REVISION DATE: May 13, 1983

BULLETIN NO: 16:2

PRODUCT: 26-6ØØ1/2 Model 16

SUBASSEMBLY: AX-9242 Z-8Ø CPU Board (Rev D)

PURPOSE: Installing Bisync on the Model 16.

DISCUSSION/PROCEDURE: The only modifications required are done on the Z-8Ø CPU board. Refer to Technical Bulletin II:17 on how to modify the board in your machine.

 COPYRIGHT © 1986

DATE: May 3Ø, 1982

REVISION DATE: May 13, 1983

BULLETIN NO: 16:3

PRODUCT: 26-6ØØ1/2 Model 16

SUBASSEMBLY: AX-9242 Z-8Ø CPU Board (Rev D)

PURPOSE: To correct intermittent operation or no operation at all of the Z-8Ø CPU Board.

DISCUSSION: This problem can be caused by the level of the clock signal to the Z-8Ø CPU not being high enough. This is due to a lack of drive from U28 (74LS74) and several capacitors which have been added to reduce the RFI output from the board. This problem can be aggravated when the power supply is loaded down by adding additional boards. This problem is eliminated by changing U28 from a 74LS74 to a 74S74.

PROCEDURE: Check U28 on the CPU board and if a 74LS74 is installed replace it with a 74S74. 74S74 ICs can be ordered from National Parts with part number AMX-489Ø.

 COPYRIGHT © 1986

DATE: July 29, 1982

REVISION DATE: January 24, 1984

BULLETIN NO: 16:4

PRODUCT: 26-4ØØ1/2 Model II
26-6ØØ1/2 Model 16

SUBASSEMBLY: AXX-Ø5Ø1 Z-8Ø CPU (Rev A/B/C)
AX-9242 Z-8Ø CPU (Rev D)

PURPOSE: Check sums for Model II/16 Boot Roms.

DISCUSSION: The following checksum values are for the boot ROM (U11) on the Z-8Ø CPU board in both the Model II and Model 16 using MEMII.

1. 432F Boots floppy drives only. (Early Model IIs only)

2. ØA79 Boots floppy drives only.

3. 4A6A Hard Drive Boot ROM (Installed with hard drive upgrade)

4. 88E2 or F42A
   Also Hard drive Boot ROM. These two ROMs have a slightly different boot sequence. The ROM checks for track ØØ indication, if the head is on track ØØ it will be stepped out and then back in before reading the boot track. This is because the Tandon drive does not have a track ØØ stop, and it is possible for the head to fall in beyond track ØØ and still give a track ØØ indication.

Hard Drive Boot ROMs may be installed in non Hard Drive Machines. With these Boot ROMs installed if the Hard Drive Interface board is not present the system will boot as a floppy system.

PROCEDURE: Before performing the Hard Drive upgrade check the checksum of the Boot ROM using MEMII. When upgrading Model IIs with Rev A/B and C CPUs the checksum will probably be 432F or ØA79 and the Boot ROM that comes with the upgrade kit will need to be installed with a checksum of 4A6A. The checksum for Model 16 Rev D CPU boards should be 88E2 or F42A. In this case **DO NOT** replace the boot ROM.

 COPYRIGHT © 1986

DATE: July 2Ø, 1982

REVISION DATE: May 13, 1983

BULLETIN NO: 16:5

PRODUCT: 26-6ØØ1/2 Model 16

SUBASSEMBLY: AX-9242 Z-8Ø CPU (Rev D)

PURPOSE: To correct problem of C41 being installed backwards on early revision D Z-8Ø CPU boards.

DISCUSSION: On early Rev D boards C41 was installed backwards. This board and earlier revisions have had the (+) sign silk screened onto the board at the wrong end of the cap. The heavy trace attached to the capacitor on the component side of the PCB is ground and the positive lead of the cap should go to the other hole on the PCB.

PROCEDURE: Check all computers that are brought into the shop for this capacitor. If it is reversed, replace it with a new 33 mfd. cap with a voltage rating between 16 and 5Ø volts (Refer to Figure 1 for correct installation).

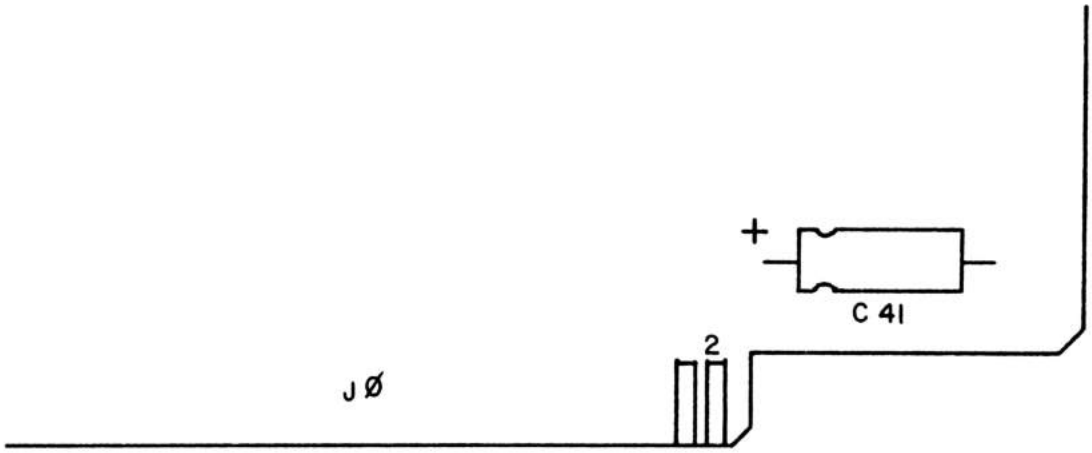

FIG 1

 COPYRIGHT © 1986

DATE: August 8, 1982

REVISION DATE: May 13, 1983

BULLETIN NO: 16:6

PRODUCT: 26-6ØØ1/2 Model 16

SUBASSEMBLY: AX-9241 FDC Board (Redesign)

PURPOSE: To correct Error 8 and various problems accessing Drive 1 in two drive Model 16.

DISCUSSION/PROCEDURE: FDC boards in 1 and 2 drive Model 16's may not be jumpered correctly for two internal drives. Check for correct jumpering FIRST if you are having problems accessing drive 1.

S-T Allows more than 1 internal drive
F-H Sets 2 internal drives

Note that F-H may have to be wire-wrapped.

 COPYRIGHT © 1986

DATE: September 1Ø, 1982

REVISION DATE: May 19, 1983

BULLETIN NO: 16:7

PRODUCT: 26-6ØØ1/2 Model 16

SUBASSEMBLY: AXX-5Ø35 Tandon Thinline 8" Drives

PURPOSE: To correct occasional Error 8s, flywheel turns but the diskette does not, drive throws belt off, intermittent drive type errors.

DISCUSSION: On some thinline drives the foam pad under the head load arm has been misadjusted so that the foam pad arm applies too much pressure to the diskette not allowing it to turn as it should. This problem can be solved by adjusting the head load arm. Also, on some drives the disk ejector has been pressing against the arm that presses the cone into the diskette. When this happens the diskette is not held as tightly as it should be. To correct this problem the trigger for the disk ejector can be adjusted.

PROCEDURE: Proper adjustments of the head load arm and diskette ejector trigger follow:

HEAD LOAD ARM ADJUSTMENT
The head load arm should be adjusted so that there is about a .Ø15-.ØØ3Ø inch gap between the foam pad and the platen (Refer to Figure 1) with the door closed and no diskette installed. Once this has been adjusted there should be a visible gap between the foam pad and the platen with the door closed and no diskette installed. Check that the upper head does not rub against the head load arm with a diskette installed and that the upper head does not hit the diskette when the diskette is being inserted or removed.

DISKETTE EJECTOR TRIGGER
When the door is closed with no diskette in the drive the trigger for the disk ejector (Refer to Figure 2) should be loose. If not, the trigger should be removed and filed where it presses against the bridge assembly. This should be done until the trigger has some free play with the door closed.

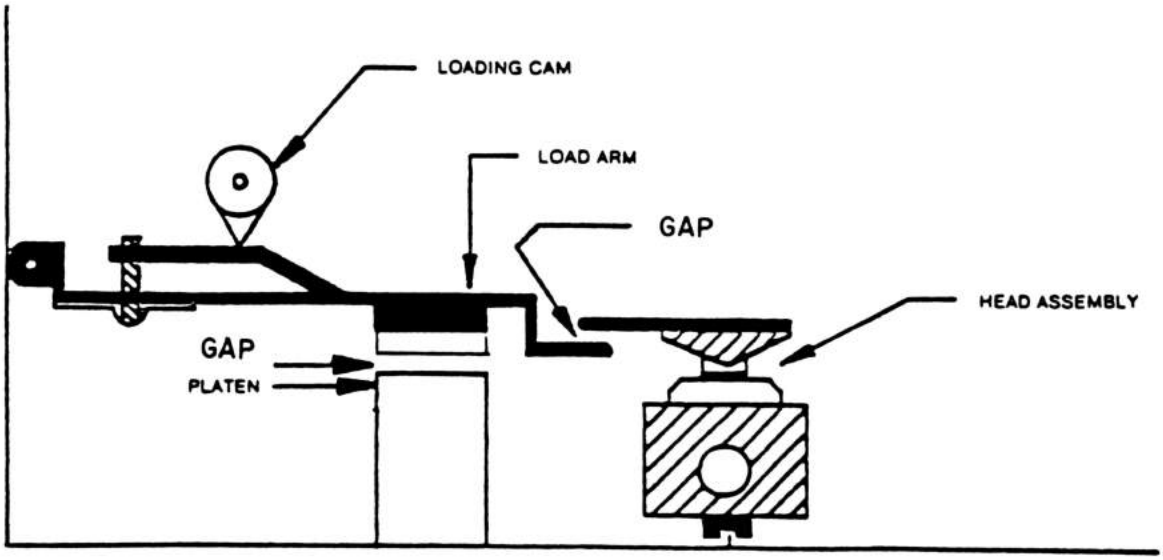
LOADING CAM
LOAD ARM
GAP
HEAD ASSEMBLY
GAP
PLATEN

FIG 1

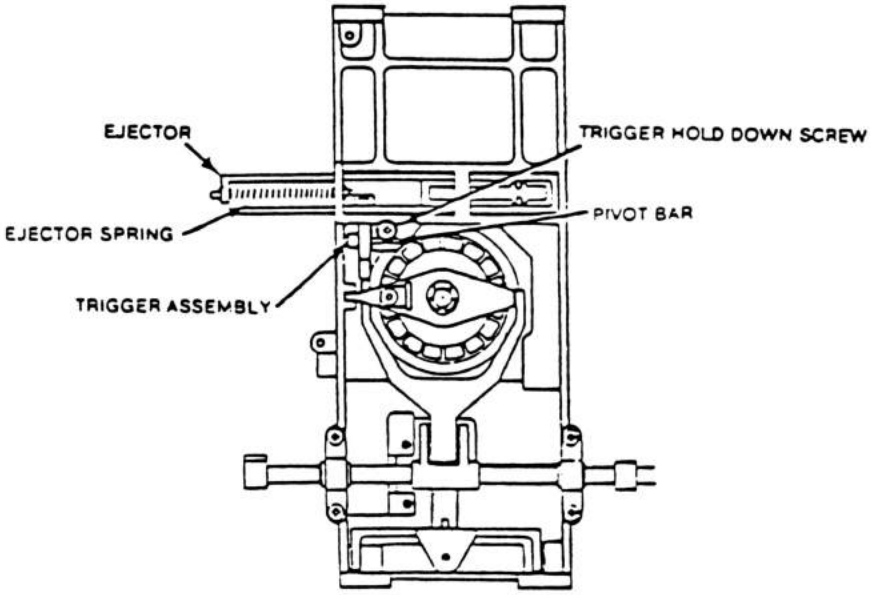
EJECTOR
TRIGGER HOLD DOWN SCREW
PIVOT BAR
EJECTOR SPRING
TRIGGER ASSEMBLY

FIG 2

 COPYRIGHT © 1986

DATE: September 27, 1982

REVISION DATE: May 16, 1983

BULLETIN NO: 16:8

PRODUCT: 26-6ØØ1/2 Model 16

SUBASSEMBLY: AXX-Ø344 Tandon Thinline Logic Board

PURPOSE: Modification of speed control circuit to minimize motor speed variation during startup

---

DISCUSSION: This modification is **MANDATORY** for any logic board that has not been modified. Check all Model 16's as well as replacement boards from National Parts for this modification. Logic boards that NEED this modification can be identified by checking component values at the following locations: C59=2.2ufd, C6Ø=1ØØufd, R128=1ØKohm, R126=47ohm. New units being manufactured will already have this modification.

PROCEDURE: Perform the modification as follows:

Remove C59 and replace with a .47ufd capacitor
Remove C6Ø and replace with a 33ufd capacitor
Remove R126 and R128 and replace both with a 2ØKohm resistor

Readjustment of the motor speed will be required after the modification.

The components needed for the modification can be ordered from National Parts using the following Part Numbers and Catalog Numbers:

2ØKohm 1/2W 5% resistor	AN-Ø3Ø6EEC	26-9999R
33ufd 6.3 capacitor	CC-336MBTP	26-9999C
.47ufd 5ØV capacitor	CC-474MGTP	26-9999C

COPYRIGHT © 1986

DATE: September 16, 1982

REVISION DATE: May 19, 1983

BULLETIN NO: 16:9

PRODUCT: 26-6ØØ1/2 Model 16

SUBASSEMBLY: AXX-5Ø35 Tandon Thinline 8" Drives

PURPOSE: Outline correct drive termination

DISCUSSION/PROCEDURE: For termination of the internal drives only the last drive on the cable is terminated. The resistor pack is RP1. Cut or bend up the following pins:

1,2,4,6,7,8,9,1Ø,11,13,15,16

Only the following pins will be used:

3,5,12,14

For termination of the external drives only the last drive on the cable is terminated. The resistor pack is also RP1. Cut or bend up only the following pins:

3,14

The following pins will be used:

1,2,4,5,6,7,8,9,1Ø,11,12,13,15,16

COPYRIGHT © 1986

DATE: September 2Ø, 1982

REVISION DATE: May 16, 1983

BULLETIN NO: 16:1Ø

PRODUCT: 26-6ØØ1/2 Model 16

SUBASSEMBLY: AXX-6ØØ9 Power Supply (11Ø82)

PURPOSE: Check for correct fusing of 24 volt line if fuse continues to blow.

DISCUSSION/PROCEDURE: Some Model 16 units from the factory may have a 1.5 amp or a 2.Ø amp fast blow installed in the 24 volt line, which is incorrect. The correct fuse is a 2.Ø amp **SLOW BLOW.** Check all units coming into the shop for proper fusing. **DO NOT** replace this fuse with one rated higher than 2.Ø amps. If the unit continues to blow 2.Ø amp slow blow fuses another problem exists.

2.Ø amp slow blow fuses may be ordered from National Parts with part number HF-ØØ34 under catalog number 26-9999F.

 COPYRIGHT © 1986

DATE: May 25, 1983

REVISION DATE: May 25, 1983

BULLETIN NO.: 16:11

PRODUCT: 26 -4167R Drive Kit

SUBASSEMBLY: Mounting Hardware

PURPOSE: Additional hardware necessary for Model 12 & 16

DISCUSSION: Early versions of this kit have been shipped without some of the hardware necessary to mount the drive properly in Models 12 & 16, or the Expansion Bay.

To mount this kit in a Model 12, two additional screws are needed. These are AHD-1818, 8-32x3/4 hex head machine screws. These run through the plastic cage surrounding the drives, to hold them from the top. Order under 26-4005.

The drive in this kit has the wrong face bezel for the Slimlines in the Model 16. Order an AZ-6968 under 26-6002 to get the correct bezel. Additional hardware required will be two AHD-1817, 8-32x1/4 countersunk screws for the top binding straps.

These kits will have all the correct screws in the future, although bezels for the Model 16 will not be included and will still have to be ordered. These bezels are quite inexpensive, and a few should probably be kept in stock.

PROCEDURE: Inspect all kits and order parts as necessary.

 COPYRIGHT © 1986

DATE: October 7, 1982

REVISION DATE: October 7, 1982

BULLLETIN NO.: 16:12

PRODUCT: Model 16

SUBASSEMBLY: Motorola and Zenith Video boards

PURPOSE: To provide schematics of the two type video boards

PROCEDURE: Attached are the schematic diagrams for the Motorola and Zenith Video Monitor boards found in the Model 16.

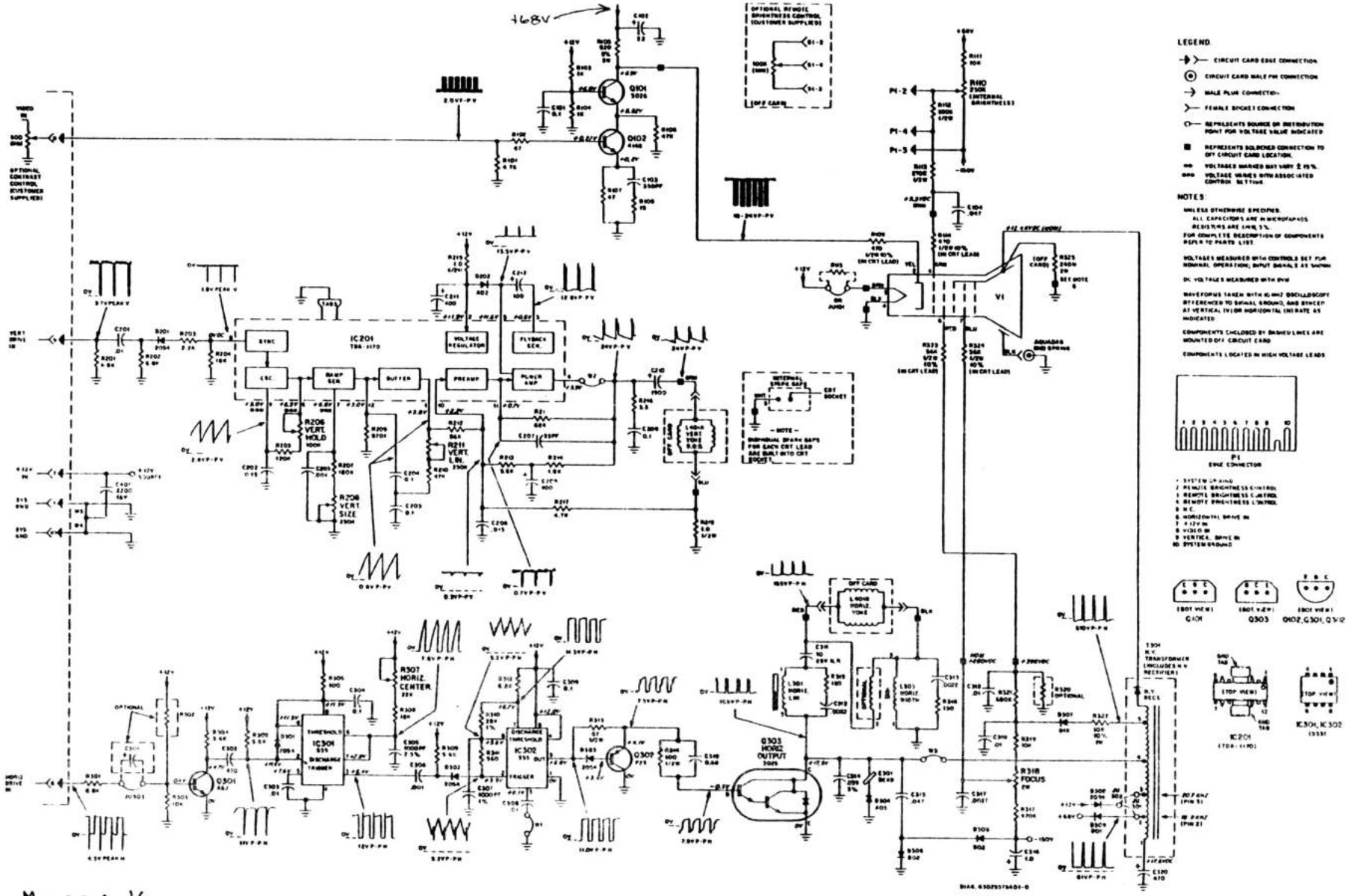

Schematic Diagram M3573/M3973 and M3574/M3974 Series

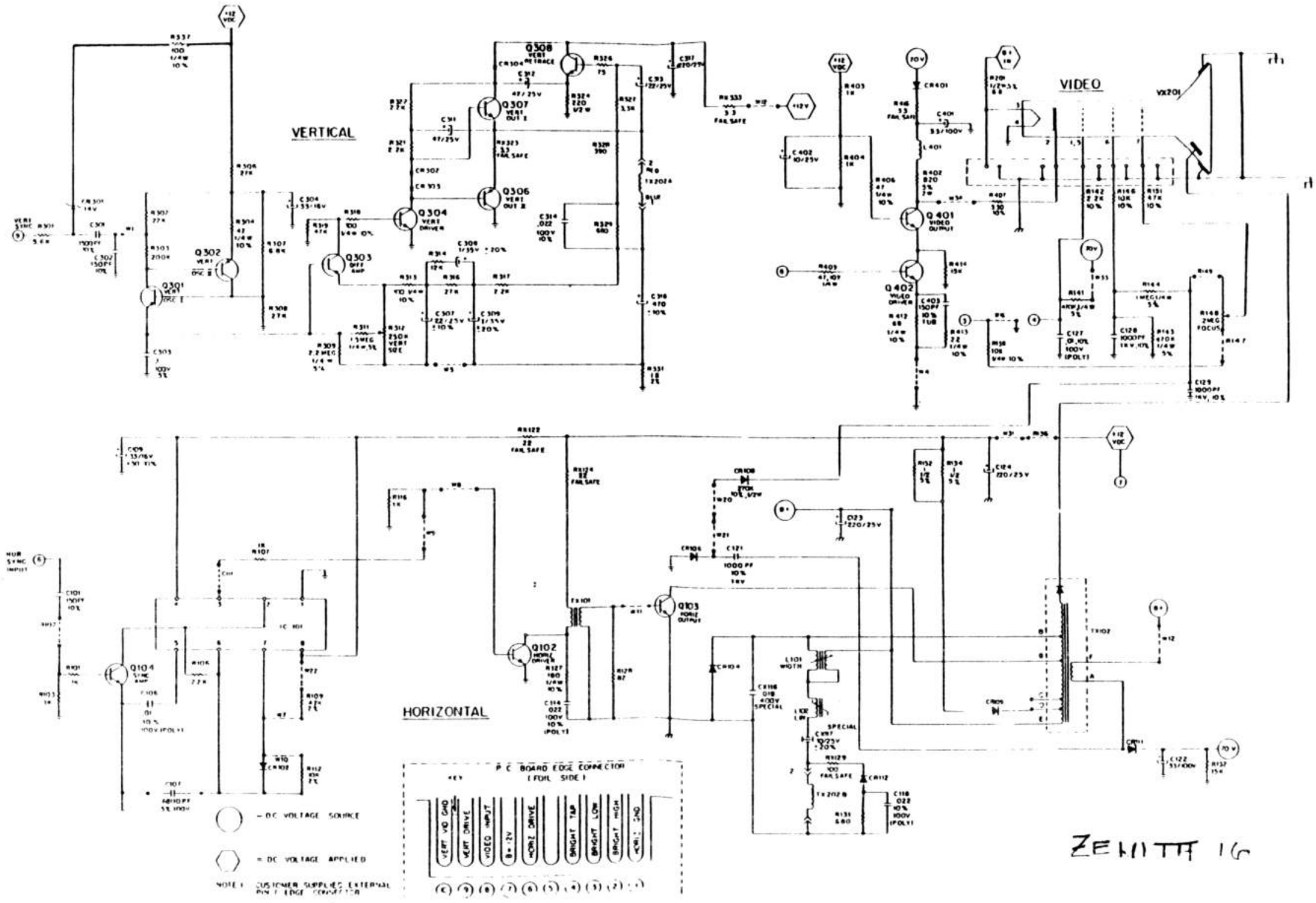
VERTICAL
VIDEO
HORIZONTAL
Q301
Q302
Q303
Q304
Q306
Q307
Q308
Q401
Q402
Q102
Q103
Q104
VX201
- DC VOLTAGE SOURCE
= DC VOLTAGE APPLIED
P C BOARD EDGE CONNECTOR
(FOIL SIDE)
ZENITH 16

COPYRIGHT © 1986

DATE: October 18, 1982

REVISION DATE: October 18, 1982

BULLETIN NO.: 16:13

PRODUCT: 8" Tandon Drives

SUBASSEMBLY: Drive logic board

PURPOSE: To correct intermittent speed errors

DISCUSSION:

When two collectors from the group of transistors Q1-Q4 short together, the motor will not run or run slowly. It also causes Q2Ø to draw excessive current to compensate for the loss of the affected transistors and blow one of the 24 volt fuses. The same applies when Q2 or Q4 shorts to the bracket under Q2Ø.

If Q2Ø shorts to the bracket, the speed control circuit will be bypassed and the motor will run at its top speed. This occurs only if the bracket is grounded (mounted in the Model 16), so the problem may not occur if the drives are removed from the computer.

PROCEDURE:

When servicing the drive, make sure that the heat sink tabs (collectors) of transistors Q1-Q4 do not touch each other or the heat sink/mounting bracket under Q2Ø. Also, check that the heat sink tab of Q2Ø does not short through the insulator to the bracket it is mounted on.

 COPYRIGHT © 1986

DATE: November 24, 1982

REVISION DATE: February 2, 1983

BULLETIN NO.: 16:14

PRODUCT: 26-6001/2 Model 16

SUBASSEMBLY: AXX-5035 Tandon 8 Inch Slimline Drives

PURPOSE: To correct problems in the early releases of the Tandon 8 Inch Slimline Drive.

DISCUSSION: Early production models of the Tandon 8 inch slimline drive may have a problem with the stepper band assembly. The screw used to fasten the band to the stepper motor may allow slippage of the band assembly, therefore changing the head radial alignment. There should be only several hundred early production drives which have this problem. All recently manufactured drives will be using the new screw and washer to secure the stepper band assembly. The part numbers for these parts are AHD-2568 (screw) and AHD-8763 (washer) and they are now available at National Parts using catalog number 26-4167.

PROCEDURE: Install the longer screw and the larger washer in the place of the old screw. The larger washer applies more contact to the stepper band and the longer screw is needed due to the increased thickness of the washer. After replacement it is essential that you perform a drive alignment to verify that the drive meets Radio Shack specifications.

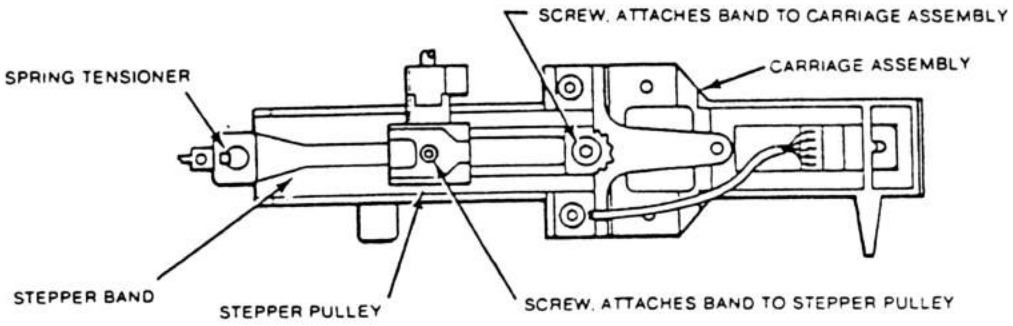

 COPYRIGHT © 1986

DATE: March 12, 1984

REVISION DATE: September Ø4, 1984

BULLETIN NO.: 16:15

PRODUCT: 26-6ØØ1/2 Models 16

SUBASSEMBLY: AXX-6ØØ9 (Aztec AA11Ø82 power supply, early production)

PURPOSE: To correct a problem which may cause the 5 volt power supply to be low on the boards in the card cage.

DISCUSSION:

When boards are installed into the mother board of the card cage, the resistance of the traces on the mother board starts to become a factor. Since the 5 volt supply supplies the largest current, the voltage drop due to the resistance in the traces is also the greatest. Problems which may arise, but are not limited to, are primarily with the 68ØØØ assembly in processing errors, memory faults with certain data patterns, systems lock-ups, failures during initialization processes, and I/O errors. Although the effect on the Z8Ø family is not quite as apparent, the Xenix system/68ØØØ will indicate Z8Ø panic errors or ØØRST7 error message. The problem is corrected by increasing the output voltage of the AA11Ø82 power supply to approximately +5.15 volts. This voltage is low enough to prevent damage to the Tandon disk drive(s) and high enough to correct any low voltage problems on the boards in the card cage.

Due to the diameter of the feedthrough from the power connector on the Mother Board to the 5 volt Busses, there exists a potential voltage drop on the 5 volt line. This can be eliminated by jumpering from the solder connection of the Molex socket to the 5 volt PCB runs at the feed through.

A condition that can cause a voltage drop and induce noise into the circuits, is by having a loose power connector at the Molex socket on the Mother Board.

PROCEDURE:

1. Measure the +5 volt supply at the Tandon disk drive (the red wire on the DC connector),and the negative side (-) of C-56 on the 8 bit memory board. If the voltage is less than +5.Ø5 volts then proceed to step 2. If it is greater the modification has already been done to the supply and nothing else needs to be done.

2. Add a 47K ohm 1/4 watt resistor at location R4Ø, R42, or R43 in the power supply. This resistor can be soldered across or (piggybacked) to any of the above resistors that are present in the supply.

3. Check the voltage at the drive again. It should now be between +5.Ø5 and +5.2Ø volts. If it is high, try a higher value for the resistor that was added, and if it is still low the power supply should be replaced.

 COPYRIGHT © 1986

DATE: April 15,1985

REVISION DATE: May 28,1985

BULLETIN NO.: 16:16

PRODUCT: 26-6001/2 Model 16

SUBASSEMBLY: AX-7981 Multi-terminal Interface

PURPOSE: To explain the installation procedure for the Multi-terminal Interface in a Model 16.

DISCUSSION: To install Multi-terminal Interface in the Model 16 you will have to modify the case bottom to allow external connection of the cables. Install the Multi-terminal Interface board in the #4 slot of the card cage so that the board will not interfere with any other boards or cables. If there is any other board in this slot move it to next available slot.

PROCEDURE:

TOOLS AND MATERIALS REQUIRED: (1) Multi-terminal Board (AX-7981)

(3) 8" Flat Extender Cables (26-1497)
(1) Hack Saw or Nibbler Tool (64-823)
(1) File

1. Remove case top to allow access to the case bottom.

2. (Refer to figure 1.) Measure 8" inches from left side (drive side) make a 3/8" inch deep cut, then measure 2" inches from first cut, and make another 3/8" inch deep cut. Cut away the two inches of plastic between the cuts. Clean the notch and make it smooth as possible.

3. Install Multi-terminal Interface board in #4 slot of card cage **(count from the Z-80 CPU board to the left.)** The proper slot positions should be filled as follows: (1) Z-80 CPU Board (2) FDC Board (3) Hard Drive Interface Board (4) Multi-terminal Interface Board (5) Video Board (6) 64K Memory Board (7) 68000 CPU Board (8) 16-Bit Memory Board, reading from right to left as you are facing the rear of unit looking at the card cage. If there is a board in #4 slot move all boards to the left leaving the #4 slot open for the multi-terminal board.

4. Fasten the extender cables to each port with the screws provided with each cable, to insure the cables do not become disconnected from inside the unit. Place the cables neatly on top of each other in the notch made in step 2.

CAUTION: Watch for plastic hold tabs on back of case top, make sure you do not puncture cables with these hold tabs.

5. Reinstall top case and check for proper operation.

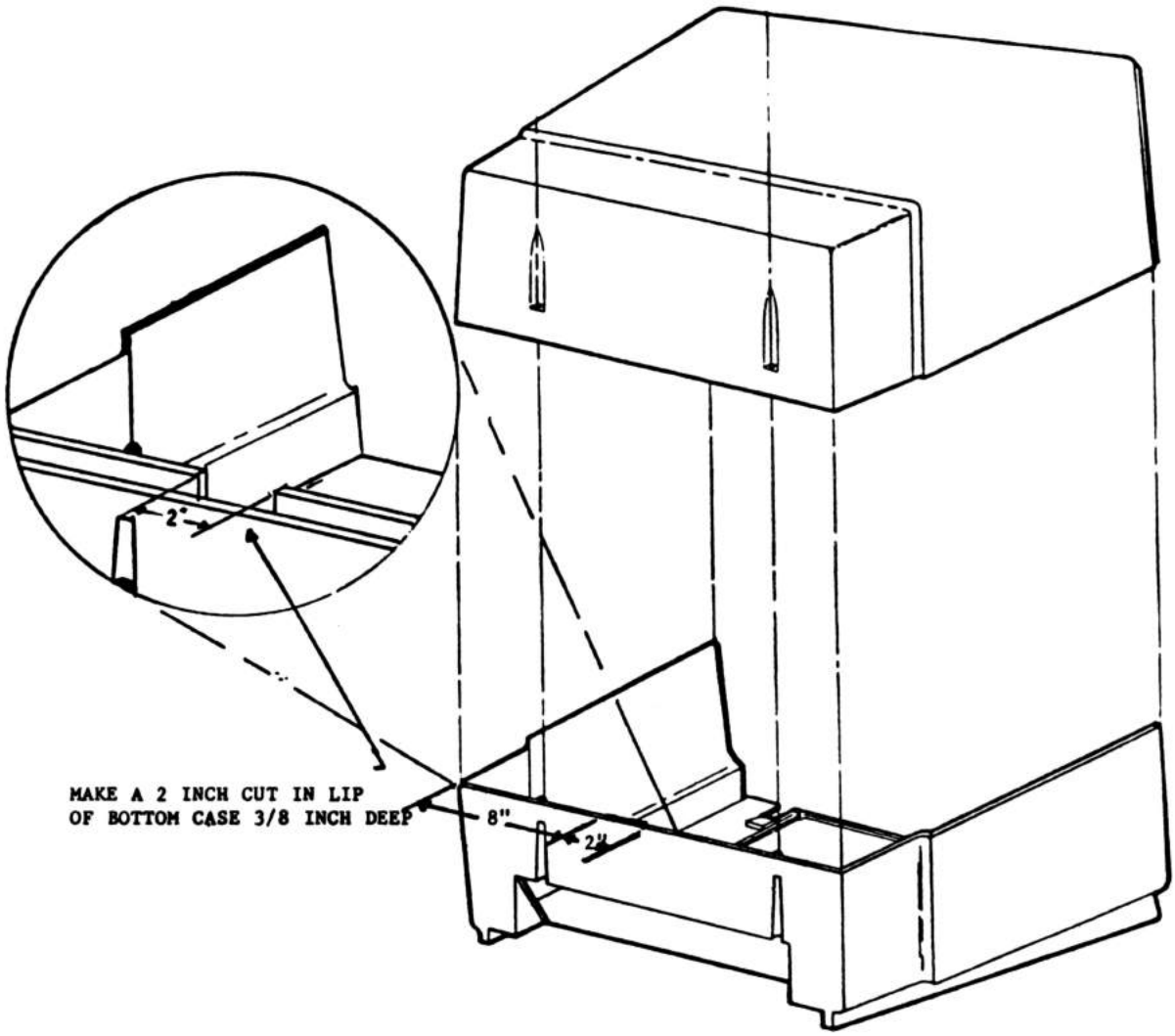

Figure 1.

COPYRIGHT © 1986

DATE: April 26, 1984

REVISION DATE: April 26, 1984

BULLETIN NO.: 16:17

PRODUCT: 26-4001/2, 26-6001/2 Model II, 16

SUBASSEMBLY: AXX-7071, AXX-0208 Key Tronic Keyboard

PURPOSE: Correct, and clarify the schematics on the model II/16 Key Tronic keyboards.

DISCUSSION: The Schematics for the Model II/16 keyboards in the Model II Technical Reference Manual are incorrect. Attached is the correct schematic and component location diagram.

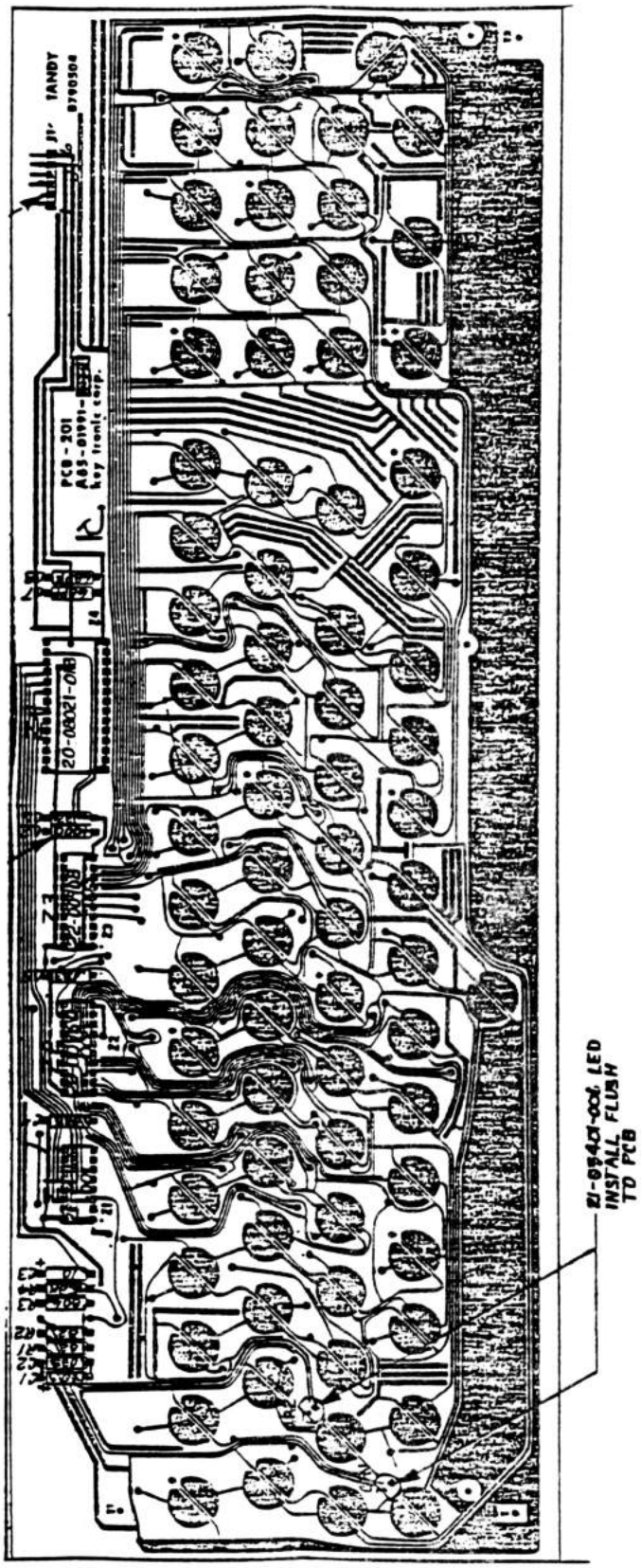
TANDY
PCB-201
20-00021-01
21-09401-001 LED
INSTALL FLUSH
TO PCB

COPYRIGHT © 1986

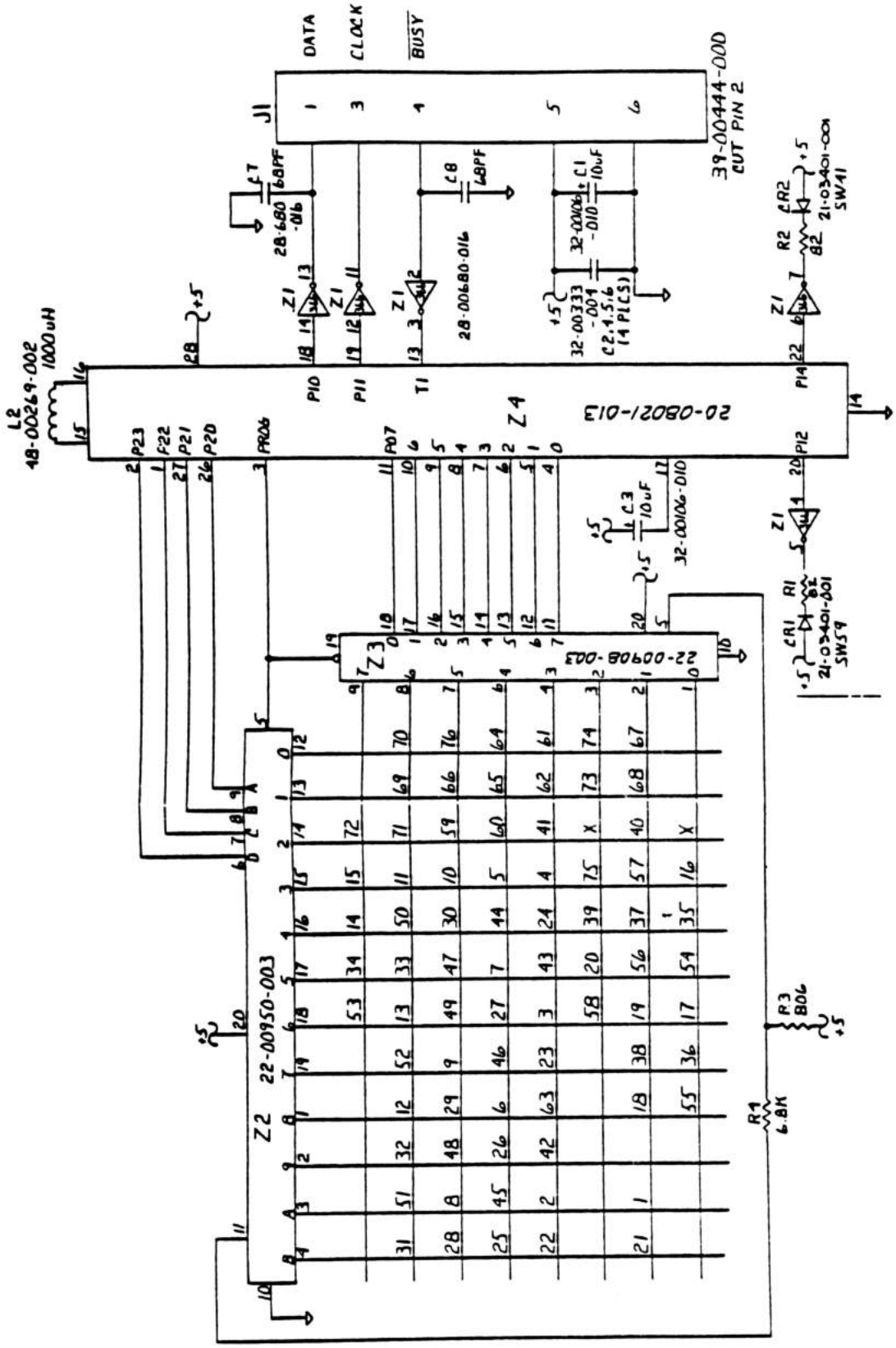

 COPYRIGHT © 1986

DATE: July 16, 1984

REVISION DATE: August 27, 1984

BULLETIN NO.: 16:18

PRODUCT: 26-6001/2 MODEL 16

SUBASSEMBLY: AX-9238 128K Memory PCB

PURPOSE: Modification to eliminate memory buffer problems on 128K PCB and listing of acceptable combinations of buffers in the U5, U6, U7 and U8 positions.

DISCUSSION:

A problem with model 16's recognizing secondary 128K memory boards has been noted. This problem has been traced to the chip select signal to buffer U8. In the current configuration, U8 is being selected on all memory boards simultaneously. The load caused by selecting U8 on all boards at once exceeds the circuit's driver capabilities causing a fan-out problem. By completing the following procedure, you are removing the chip select signal to U8 and utilizing a previously unused gate to to select this chip only when needed.

NOTE: THIS MODIFICATION IS MANDATORY FOR ALL UNITS BEING SERVICED.

PROCEDURE:

1.) On the **COMPONENT** side of the PCB, cut the trace going to U18, pin 11.

2.) On the **FOIL** side of the PCB, install the following jumpers.

a.) Jumper U25 pin 8, to U8 pin 1.
b.) Jumper U25 pin 9, to U9 pin 5.
c.) Jumper U25 pin 10, to U18 pin 9.
d.) Jumper U25 pin 11, to U18 pin 2.

The following is a listing of the acceptable combinations of buffers in the U5, U6, U7 and U8 positions on the 128K memory board. If any other combinations exist in these positions, change them to one listed below.

COMBINATION	U5	U6	U7	U8
1	MC3482AL	MC3482AL	MC3482AL	MC3482AL
2	MC3482BL	MC3482BL	MC3482BL	MC3482BL
3	MC3482BL	74S373	74S373	MC3482BL
4	74AS373	74S373	74S373	74AS373
5	74AS533	74AS533	74AS533	74AS533
6	74AS373	74AS373	74AS373	74AS373

COPYRIGHT © 1986

DATE: January 16, 1985

REVISION DATE: January 16, 1985

BULLETIN NO.: 16:19

PRODUCT: 26-6001/2 (Model 16)
26-6014 (8 MHz CPU upgrade kit)

SUBASSEMBLY: 8 MHz 68000 CPU board (AX-9006)

PURPOSE: To insure good ground connections between 68000 CPU and memory boards.

DISCUSSION:

Due to an error in the artwork on early revision (Revision A) boards, a modification to insure good ground connections between the 68000 CPU board and associated memory boards is required.

PROCEDURE:

This modification is for Revision A boards only.

Using wire wrap wire, install the following jumpers on the solder side of the 68000 CPU board:

(1) Jumper J2, pin 5 to ground.
(2) Jumper J2, pin 13 to ground.
(3) Jumper J2, pin 34 to ground.

Ground may be found at the feed-throughs on the ground plane near J2 on the solder side on the board.

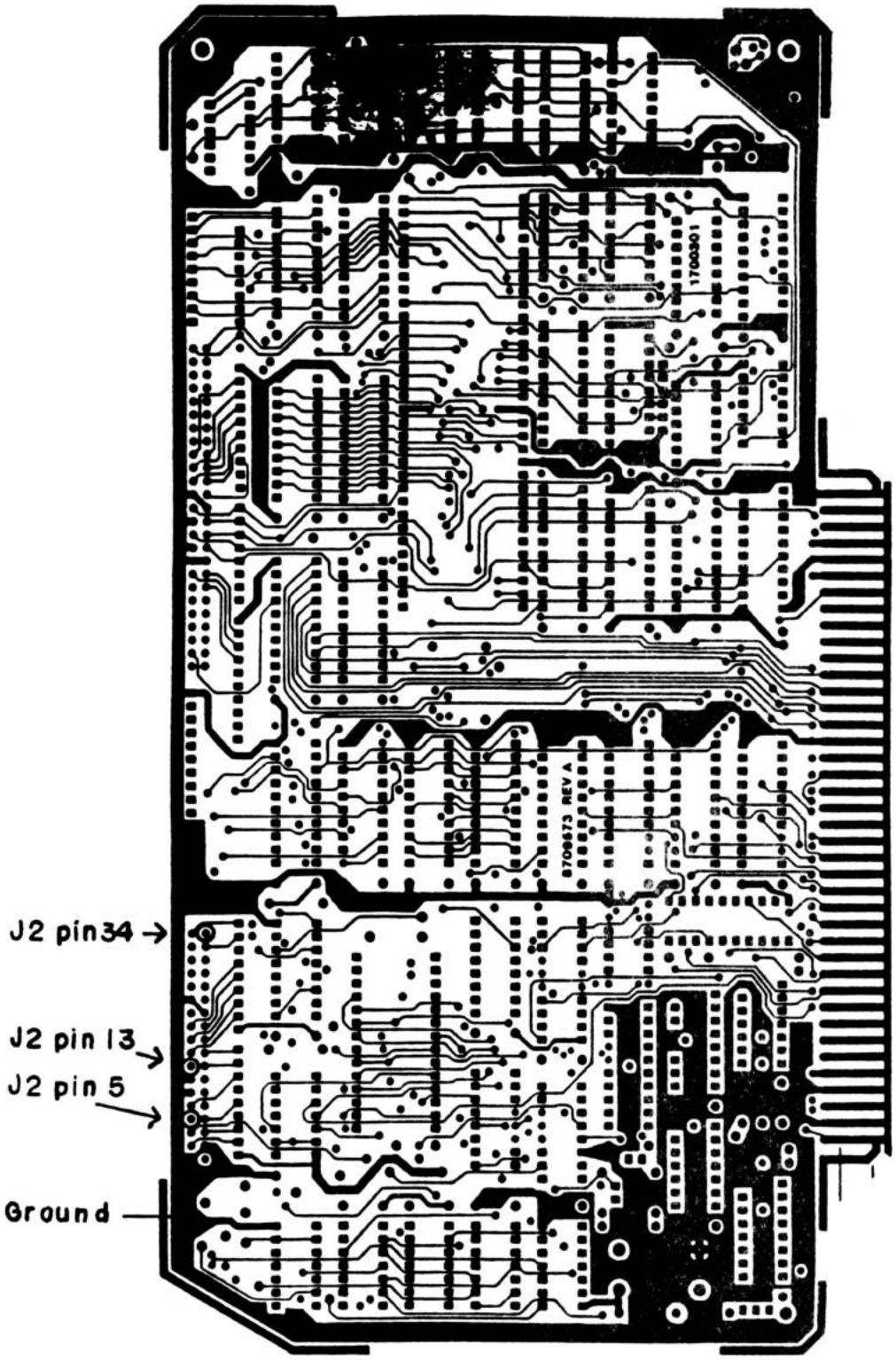

SOLDER SIDE (LAYER 4)

COPYRIGHT © 1986

DATE: January 16, 1985

REVISION DATE: February 13, 1985

BULLETIN NO.: 16:20

PRODUCT: 26-6001/2 (Model 16)
26-6014 (8 MHz CPU upgrade kit)

SUBASSEMBLY: 8 MHz 68000 CPU board

PURPOSE: To correct data setup time to memory board during a write cycle.

DISCUSSION:

An error in the artwork on early revision 8 MHz 68000 CPU boards (Revision A) will cause the data setup time to the 68000 memory board to be incorrect during a write cycle.

PROCEDURE:

This modification is for Revision A boards only.

Using wire wrap wire, install the following four jumpers:

(1) Jumper U10, pin 9 to U2, pin 4.
(2) Jumper U2, pin 3 to U18, pin 11.
(3) On the solder side of the board, jumper U18, pin 12 to U19, pin 8.
(4) On the solder side of the board, jumper U18, pin 13 to U19, pin 7.

 COPYRIGHT © 1986

DATE:	March 19, 1985	
REVISION DATE:	March 19, 1985	
BULLETIN NO.:	16:21	
PRODUCT:	26-6001/2	(Model 16)
	26-6014	(8 Mhz 68000 CPU upgrade kit)
SUBASSEMBLY:	26-6014	8 MHz 68000 CPU upgrade kit
	AXX-6009	Aztec AA11082 power supply

PURPOSE: To outline 8 MHz upgrade procedure.

DISCUSSION:

When upgrading machines to the 8 MHz 68000 CPU board and 512k/1 meg memory board, the supply voltages from the Aztec AA11082 power supply (AXX-6009) need to be checked as they may now be too high. It is also essential that all pertinent 16 and 6000 series Technical Bulletins be checked for and implemented to ensure reliability of the upgrade.

PROCEDURE:

Remove the 6 MHz 68000 CPU card and its associated memory cards. Install the 8 MHz 68000 CPU and the 512k/1 meg memory card. Measure the +5 volt supply at the Tandon floppy disk drive (red wire on the DC connector) and at the negative side (-) of C56 on the 8-bit Z80A memory board. If the voltage is **less** than +5.05 volts, then perform Technical Bulletin 16:15. If it is **greater** than +5.20 volts, then examine resistor locations R40, R42, and R43 on the power supply. If a resistor is piggy-backed on any of the above resistors and the +5 volt line is higher than +5.20 volts, the piggy-back resistor value should be raised to a higher value. After the value is changed, the +5 volt line should be measured again at the drives and on the memory board. If it is now between +5.05 and +5.20 volts, proceed to check out the operation of the machine using the SYSTEM test and the 68000 family diagnostics.

In addition to checking power supply voltages, **it is essential** that **all** 16 series and pertinent 6000 series Technical Bulletins be checked for and implemented to ensure the reliable operation of the machine. After modification, a complete system check under diagnostics should be performed.

 COPYRIGHT © 1986

TANDY COMPUTER PRODUCTS

DATE: May 29, 1985

REVISION DATE: May 29, 1985

BULLETIN NO.: 16:22

PRODUCT: 26-6ØØ1/2 Model 16

SUBASSEMBLY: AXX-Ø344, Tandon Belt Drive Logic Board, Rev. Y

PURPOSE: To correct an error in installation of R87

DISCUSSION: Some Tandon Belt Drive Logic Boards (Rev. Y) have come from the vendor with R87, a 15Ø ohm pullup resistor, installed incorrectly. These boards may be identified by the existance of a small white sticker (bearing a bar code, three numbers, and the letter "Y") attached to the board right next to the "REV" marking. The defective boards will not see the index pulses at all and will not recognize an inserted diskette, i.e. will remain at the "Insert Diskette" prompt even after a diskette is inserted and the drive door is closed.

PROCEDURE: Locate R87 on the Drive Logic Board. Note that one lead is connected to a feedthrough which has a trace running to U32, pin 1. Unsolder this lead of R87 and resolder it to the feedthrough right above it. The correct feedthrough is a +5V trace.

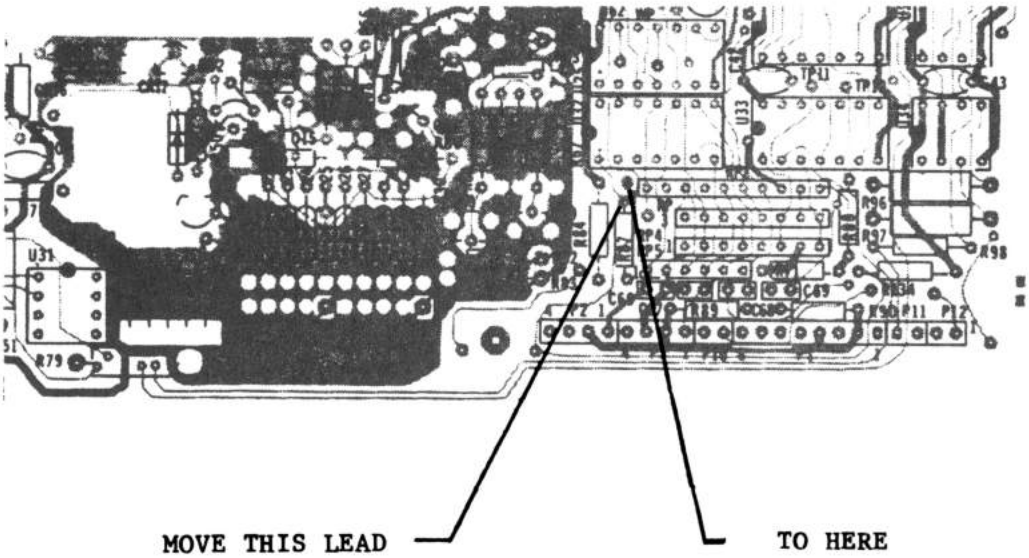

 COPYRIGHT © 1986

DATE: July 11, 1985

REVISION DATE: July 11, 1985

BULLETIN NO.: 16:23

PRODUCT: 26-6001/2 Model 16

SUBASSEMBLY: AX-9416 6 Mhz (short) 68000 CPU board (All Revisions)

PURPOSE: Describe modifications to allow Xenix 3.0 to run on a 6 Mhz CPU board.

DISCUSSION: The following describes the procedures for modifying 6 Mhz, or "slow" 68000 CPU boards to allow the running of Xenix System 3. It is important to note that this modification applies only to the "short" 68000 CPU's only. **The "long" 68000 CPU boards cannot be modified to run Xenix System 3.** The terms "long" and "short" 68000 CPU board refers to width of the board itself. These boards can also be identified by the component location number silk screened on the board. For "long" boards the 68000 processor is located at U22. On the "short" boards its at U19.

PROCEDURE:

NOTE: The parts required for this upgrade will be supplied in the upgrade kit.

1.) Install the new PAL in U36.

   a.) Remove the old PAL in the U36 position on the 6 Mhz 68000 CPU board.
   b.) On the new PAL (U36) bend pin 5 up so as not to come in contact with the socket when installed.
   c.) Install new PAL U36. (device number 3646D4, or 46D4)
   d.) Jump U36 pin 5 to U25 pin 9.

2.) BERR modification.

   a.) On **SOLDER SIDE** cut trace at U21 pin 9.
   b.) Jump U9 pin 4 to U33 pin 13.

3.) Install the new U48 PAL.
   a.) Remove old U48 PAL (device type 16R6).
   b.) Install new U48 PAL (device type 16R4) This new PAL will have check sum 483999 stamped on top.

4.) WAIT modification.

a.) Add 330pf cap from the ground end of C43 to the feed-thru near the 5 volt end of C37 (this feed-thru is hooked to TP-28).

b.) On the **SOLDER SIDE** of the board, add a ground strap jumper (22-24 gauge stranded wire) from the ground end of C29 to the ground end of C28.

5.) Configure the refresh jumper to E1-E2 (E2 is the middle pin).

6.) Ensure compliance with ALL other Technical Bulletins, paying particular attention to the following:

16:15 16:18

7.) Reassemble unit and test with 68000 diagnostics and Xenix 3.0.

REPLACEMENT PARTS LIST

New PAL U36	MX-2125	26-6021	(REPAIR PART ONLY)
New PAL U48	MX-2124	26-6021	
330pf capacitor	CF-1830	26-9999C	
Ground wire			Use 22-24 gauge insulated stranded wire.

 COPYRIGHT © 1986

DATE: July 22, 1985

REVISION DATE: July 22, 1985

BULLETIN NO.: 16:24

PRODUCT: 26-6001/2 Model 16

SUBASSEMBLY: AX-9416 6 MHz 68000 CPU Board (short board, all rev. levels)

PURPOSE: To outline modifications to increase operational reliability.

DISCUSSION:

For correct operation with both the 128k/256k and the 512k/1 meg 68000 memory boards, the following modifications need to be performed on the 6 MHz 68000 CPU board.

** **Compliance With This Bulletin Is Mandatory** **

PROCEDURE:

Modifications for the 6 MHz 68000 CPU board are as follows:

(1) If PAL U48 is a 16R6 device, remove it and replace it with a new PAL which is a 16R4 device.

part # MX-2124, cat. # 26-6006

(2) Add a 330 pf ceramic capacitor from the ground end of C43 to the feedthrough near the +5V end of C37. This feedthrough connects to TP28. This capacitor may be ordered as part # CF-1514, cat. # 26-9999.

(3) Add a ground strap (22-24 gauge wire) from the ground end of C29 to the ground end of C28 on the solder side of the board.

(4) The refresh jumper option **must** be set to E1-E2.

In addition, the 68000 memory boards should be checked for the presence of all pertinent Technical Bulletins. System operation should be checked after performing the modifications with 68000 diagnostics in both the Z80 and 68000 modes.

 COPYRIGHT © 1986

DATE:	January 14, 1986
REVISION DATE:	January 14, 1986
BULLETIN NO:	16:25
PRODUCT:	26-6001/2 Model 16
SUBASSEMBLY:	AXX-0501 Z80 CPU (Rev. C) AX-9242 Z80 CPU (Rev. D) AX-9033 Late Design FDC Board (Rev. A, Rev. blank) AXX-0505 Early Design FDC Board (All Revisions)

PURPOSE: To allow use of Disk Cartridge System.

DISCUSSION:

In order to use the Disk Cartridge System with a Model 16, it is necessary to invert the signal XFERRQ on both the CPU and FDC boards. This necessitates modifications to these boards. In addition, mechanical alteration to the Model 16 case and the card cage retaining bracket is necessary to allow the Disk Cartridge Interface Card to fit into the Model 16.

PROCEDURE:

This procedure will be divided into electrical and mechanical alterations.

Electrical Alterations:

Z80 CPU Board -- Revisions C and D

NOTE: These modifications will only be supported on Revision C and D CPU boards.

Revision D: (AX-9242)

1) Cut the trace to U1 pin 1 on the component side.
2) Cut the trace to U20 pin 25 on the solder side.
3) Jumper U20 pin 25 to U1 pin 2 on the solder side.
4) Jumper U1 pin 1 to U39 pin 6 on the solder side.

Revision C: (AXX-0501)

Perform Steps 2-4 of the Revision D modifications.

Redesign (late) FDC board -- Revisions A and Blank (AX-9033)

1) Move jumper L-M to M-N.

Early FDC board -- All Revisions (AXX-0505)

1) Cut U34 pin 11 and bend it upwards.
2) Jumper U34 pin 11 to U34 pin 14 on the component side.
3) Jumper U6 pin 38 to U16 pin 13 on the solder side.
4) Jumper U16 pin 12 to the feedthrough connected to J0 pin 41 on the solder side.

Mechanical Alterations:

The mechanical alterations involve modifying the lower portion of the case to provide an exit for the Disk Cartridge System (DCS) interface cable, and adding a bracket to the card cage which allows the card cage retaining bracket to be used in a position which will not conflict with the cable connector on the DCS Interface board.

The bracket extender is available as:

Part # MB-0038, Cat. # 26-4001/2, 26-6001/2

The modification procedure for the case is essentially identical to that outlined in Technical Bulletin 16:16. To perform the case mod, you will need a file and a hacksaw or nibbling tool.

(1) Remove the case top to allow access to the case bottom.

(2) Refer to Figure 1. Measure eight (8) inches from the drive side (left side as viewed from the back) of the machine. Make a 3/8" deep cut. Measure two (2) inches further to the right from this first cut, and make another 3/8" deep cut. Cut away the two inches of plastic between the cuts. Clean the notch and remove all burrs.

(3) Install the DCS interface board in the fourth card cage slot (viewed from the back, start with the **Z80 CPU board and count towards the left).** The extender bracket (Figure 2) will be installed as shown in Figure 3, on the side of the card cage nearest the floppy drive. The card cage bolt will pass through the hole in this additional bracket, and the end of the card cage retaining bracket will be held by the extender bracket.

(4) Install the Disk Cartridge Interface Cable and pass it through the notch made in step 2. Reinstall the top case, making sure not to puncture the cable with the plastic holding tabs on the case top. Test for proper operation.

Figure 1.

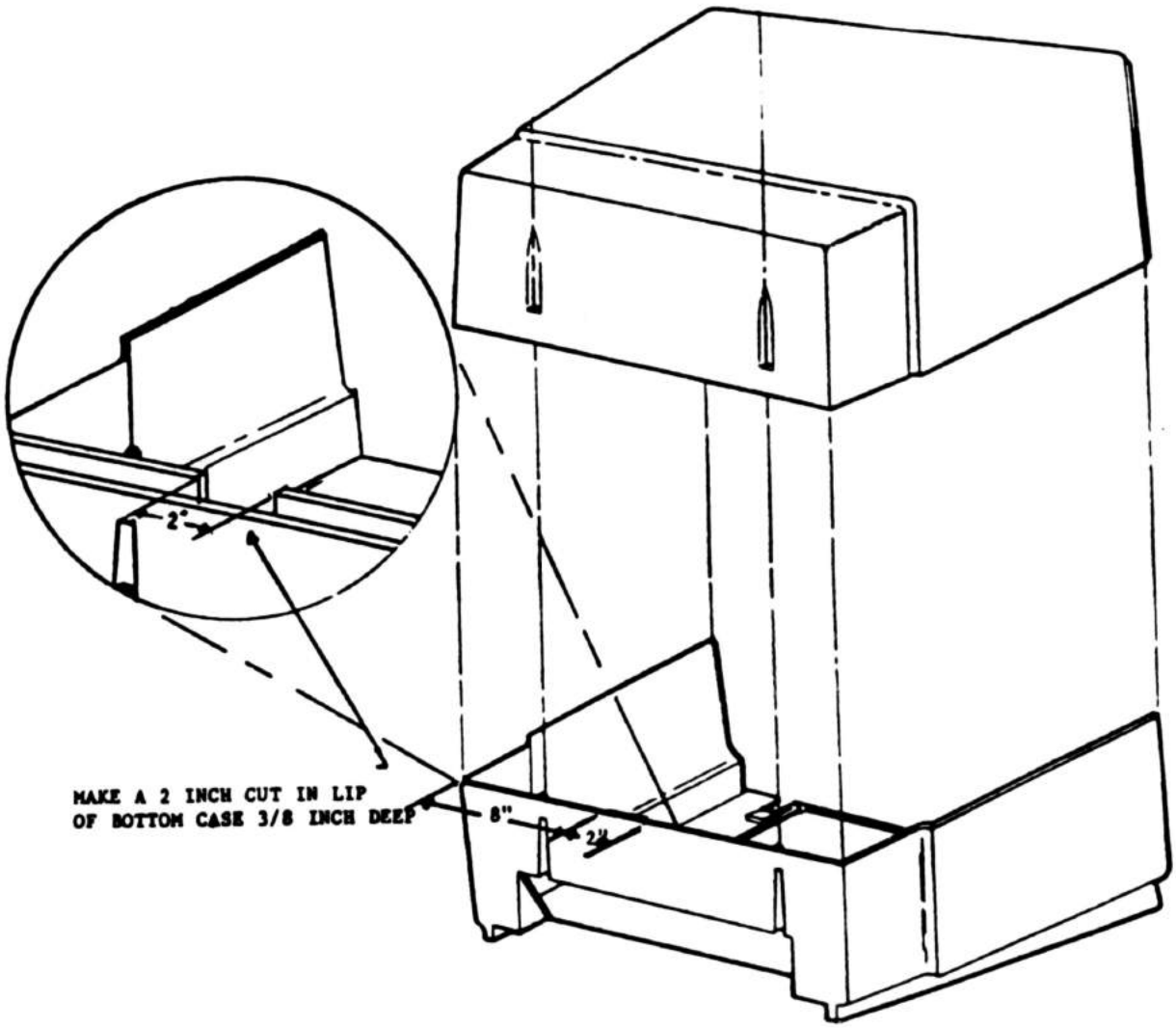

Figure 2.

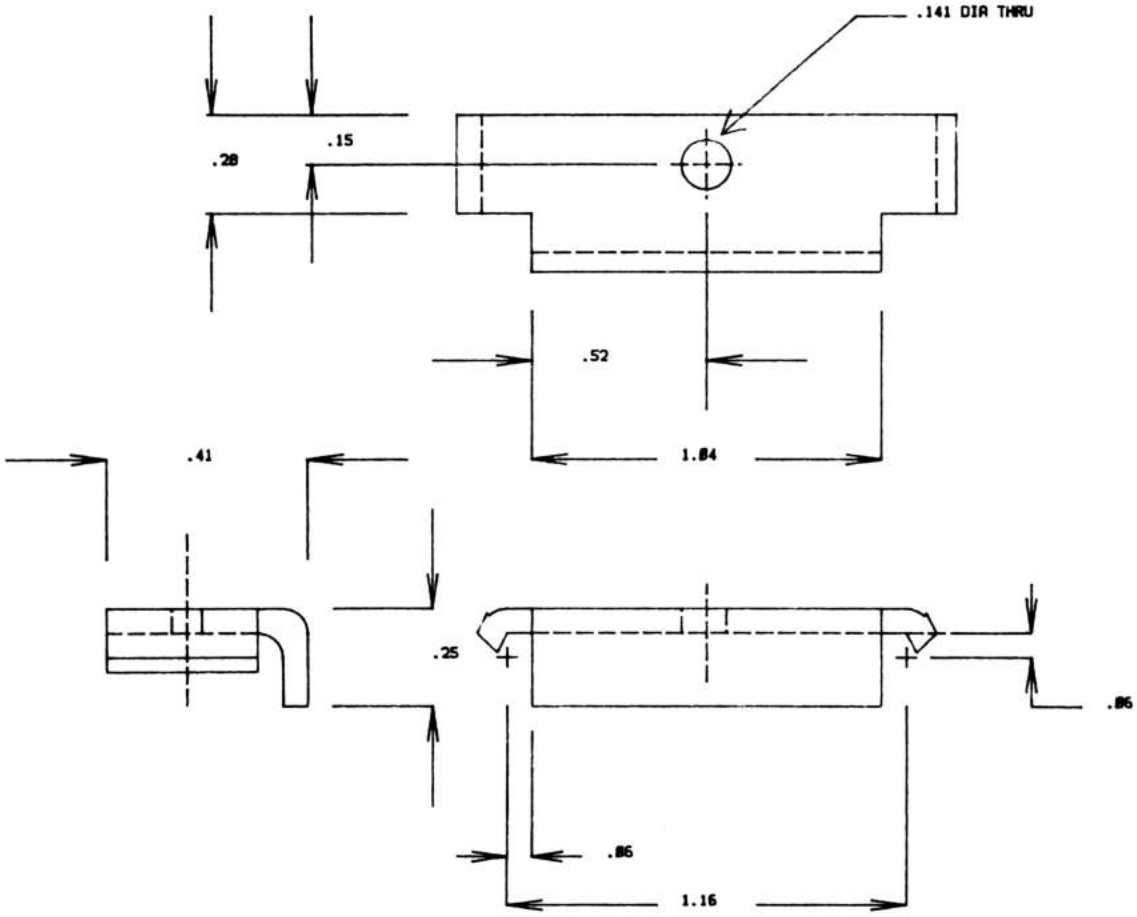

Figure 3.

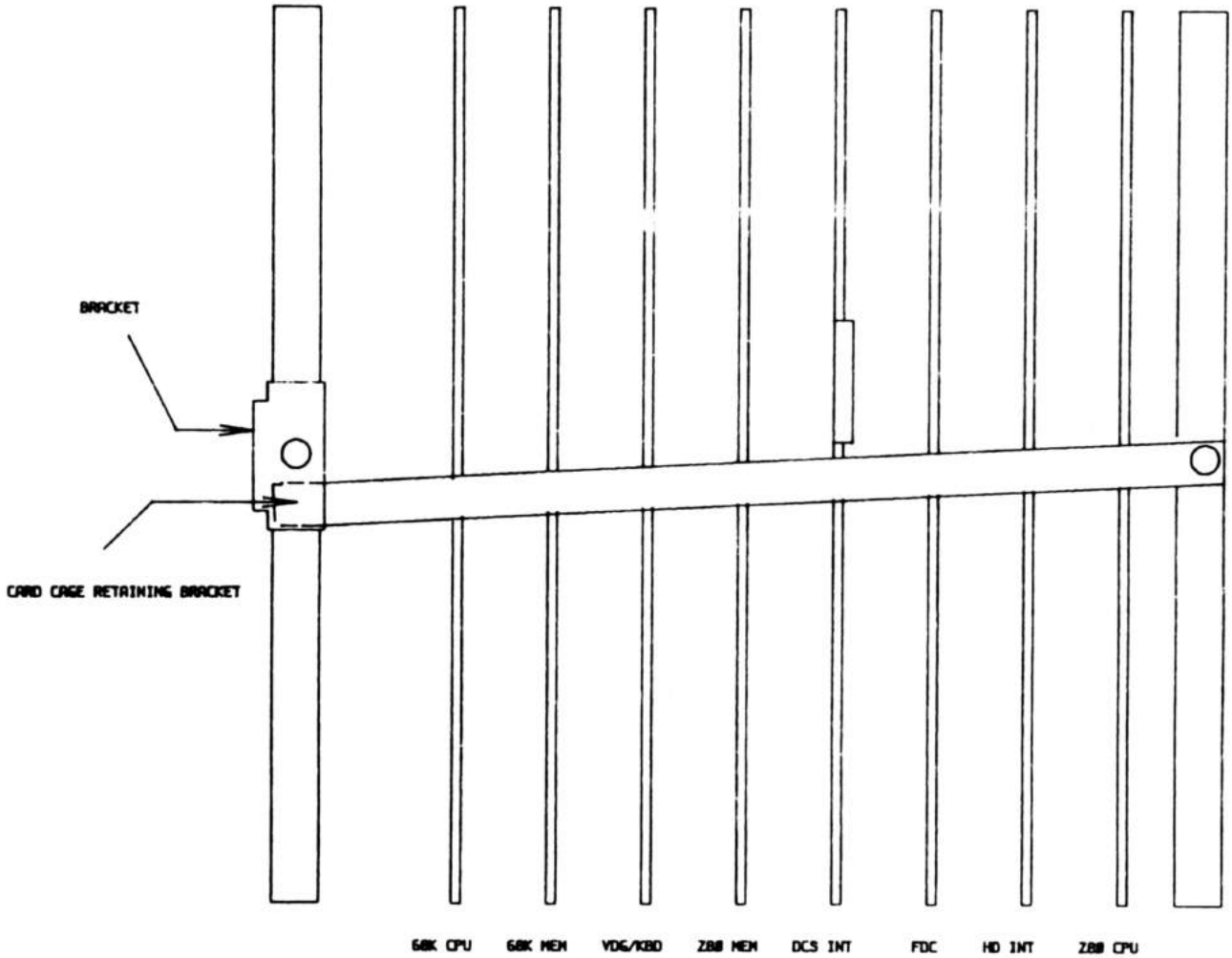
BRACKET
CARD CAGE RETAINING BRACKET
68K CPU
68K MEM
VDG/KBD
Z80 MEM
DCS INT
FDC
HD INT
Z80 CPU